HONDA
POWER PRODUCTS

BRUSH CUTTER

UMK435

PARTS CATALOGUE

2

14VK4502

© Honda Motor Co., Ltd. 2005

FOREWORD INDEX 1

ENGINE GROUP 2

FRAME GROUP 3

PART NUMBER INDEX 4

PART NAME INDEX 5

Instruction for use of parts catalogue

- **This parts catalogue was prepared based on the latest information available as of November 10, 2005.**
  - See the parts catalogue news for any revision that is made after November 10, 2005.
- **Always specify the part number when ordering a part.**
  - Check the model, type, serial numbers, color, maker, and the size as needed before ordering a part.
  - Note that the illustrations (part drawings) can differ from the actual parts in shape.
    They are given just to help you to refer to the parts.
- **When modifications or additions to this parts catalogue are made, a revised edition will be issued at an appropriate time, with successively progressing revision numbers on the cover. We recommend obtaining such revisions in order to keep your parts catalogue up-to-date at all times. To check whether a parts catalogue revision has been issued, please contact your Honda distributor.**

Initial version issue date January 20, 2005
Honda Motor Co., Ltd.

CONTENTS

	Page	Address No.	
Instruction for use of parts catalogue	1	B 1	1
How to refer to the part information	2	B 2	
Part catalogue structure	3	B 3	
When the parts were revised	4	B 4	
Abbreviations used in the parts catalogue	4	B 4	
How to check the part block and serial numbers	5	B 5	
Models, parts catalogue codes and applicable serial numbers	6	B 6	
Fuel hose, general purpose hoses and vinyl hose	7	B 7	
Illustrated index	8	B 8	
ENGINE GROUP	11	C 1	2
FRAME GROUP	25	D 1	3
PART NO. INDEX	33	E 1	4
PART NAME INDEX	35	F 1	5

How to refer to the part information

Ⓐ Reference with “Illustrated index”

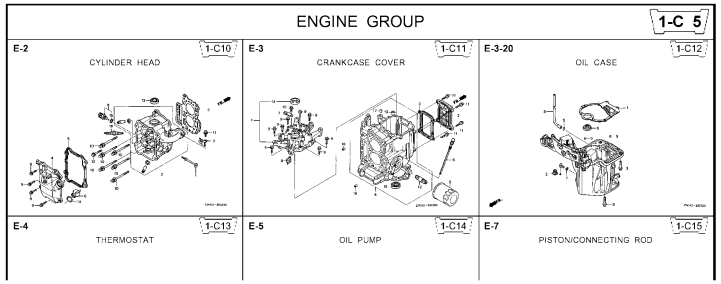

Ⓑ Reference with “Part number index”

PART NO. INDEX

Part Number	Address	Page	Ref.
06000			
06316-ZW9-000	1-G9	88	1
11000			
11300-ZW9-405	1-C11	27	1
11300-ZW9-406	1-C11	27	1
11340-ZW9-000	1-C11	27	2
11342-ZW9-000	1-C11	27	3
11381-ZW9-003	1-C12	28	1
12000			
12000-ZW9-405ZA	1-C11	27	4
12155-ZV4-A00	1-C13	29	1
12166-ZW9-000	1-C10	26	1
12209-GB4-681	1-C16	32	1
12210-ZW9-405ZA	1-C10	26	2
12216-ZE2-300	1-E8	55	1
	1-E11	58	1

Part Number	Address	Page
15212-ZW9-000	1-C14	3C
15220-ZW9-003	1-C14	3C
15332-ZW9-000	1-E8	55
15332-ZW9-A30	1-E11	58
15400-PFB-004	1-C11	27
15422-ZW9-000	1-C14	3C
15473-881-000	1-C14	3C
15474-ZW9-000	1-C14	3C
15611-921-000	1-C10	26
15655-ZW9-000	1-C11	27
16000		
16010-ZV4-005	1-D4	36
16011-ZV4-005	1-D4	36
16013-ZW9-003	1-D4	36
16016-ZW9-003	1-D4	36
16016-ZW9-721	1-D4	36
16023-ZW9-003	1-D4	36
16024-ZV4-650	1-D4	36
16028-ZV4-650	1-D4	36

Ⓒ Reference with “Part name index”

PART NAME INDEX

Part name	Address	Page	Ref.	
[A]				BOLT ,
ABSORBER ,FUEL	1-E15	62	5	
ARMATURE COMP.	1-D11	43	7	BOLT ,
ARM COMP. ,LINK JOINT	1-G6	85	18	BOLT ,
ARM COMP. ,SHIFT LINK	1-G6	85	14	BOLT ,
ARM COMP. ,TILT	1-F15	79	20	
ARM ,FUEL PUMP ROCKER	1-C16	32	4	
ARM ,REVERSE LOCK	1-F15	79	18	
ARM ,SHIFT LINK	1-F11	74	7	
ARM ,STOPPER	1-D1	33	12	BOLT ,
ARM ,THROTTLE REMOTE	1-F11	74	6	
ARM ,VALVE ROCKER	1-C16	32	3	
[B]				
BAG ,TOOL ,160MM	1-G5	84	10	
BAND	1-G6	86	37	
BAND B1,WIRE	1-F6	69	1	
BAND ,CORD	1-F3	67	18	BOLT ,
BAND ,TUBE CLIP ,11MM	1-E15	63	20	
BAND ,TUBE CLIP ,12.5MM	1-E15	63	19	BOLT ,

Address No.

E-2 CYLINDER HEAD 1-C10

Block No.

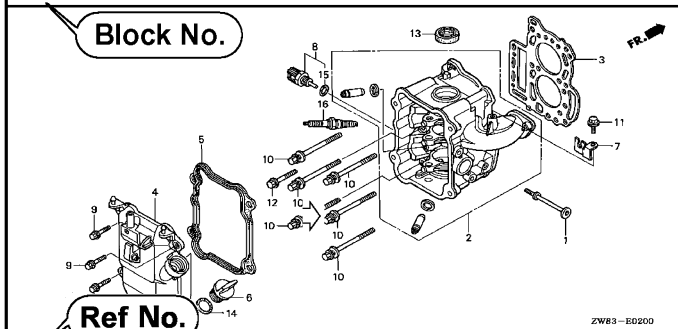

Ref No.

Service item	F.R.T.
O-RING, 26X2.7	0.1
.PLUG, SPARK	
O-RING, 9.5X1.5	0.2
.SENSOR ASSY., WATER TEMPERATURE	
COVER COMP., HEAD	0.3
.PACKING, HEAD COVER	
GASKET, CYLINDER HEAD	1.8
OIL SEAL, 20X32X6	2.4
HEAD COMP., CYLINDER	3.1

Ref. No.	Part No.	Description	Reqd. QTY BF 9.9D1	BFP 9.9D1	BF 10D1	BFP 10D1	BF 10B1	BFP 10B1	Serial No.	Parts catalogue code
1	12166-ZW9-000	STOPPER, ENGINE SIDE	2	2	2	2	2	2		
2	12210-ZW9-000ZA	HEAD COMP., CYLINDER *NH8*.....DARK GRAY	1	1	1	1	1	1		
3	12251-ZW9-003	GASKET, CYLINDER HEAD	1	1	1	1	1	1		
4	12310-ZW9-000	COVER COMP., HEAD	1	1	1	1	1	1		
5	12312-ZW9-000	PACKING, HEAD COVER	1	1	1	1	1	1		
6	15611-921-000	CAP, OIL (NO GAUGE)	1	1	1	1	1	1		
7	16617-ZW9-000	HOLDER, CABLE	1	1	1	1	1	1	-------- --------	SC,SG
	16617-ZW9-010		1	1	1	1	1	1	-------- 1001800	LHC,LHD
			1	1	1	1	1	1	1001801 --------	LHC,LHD
8	35673-ZW5-003	SENSOR ASSY., WATER TEMPERATURE	1	1	1	1	1	1		
9	90003-ZW9-000	BOLT, FLANGE, 6X22	4	4	4	4	4	4		
10	90007-ZW9-003	BOLT, FLANGE, 8X83	6	6	6	6	6	6		
11	90011-ZW9-000	BOLT, FLANGE, 6X14(CT200)	1	1	1	1	1	1		
12	90020-ZW9-000	BOLT, FLANGE, 8X40	2	2	2	2	2	2		
13	91202-KJ9-003	OIL SEAL, 20X32X6	1	1	1	1	1	1		
14	91301-805-000	O-RING, 26X2.7	1	1	1	1	1	1		
15	91307-PK2-005	O-RING, 9.5X1.5(HONDA KIKAKI)	1	1	1	1	1	1		
16	98059-55916	PLUG, SPARK (CR5EH-9)	2	2	2	2	2	2		
	98059-55926	PLUG, SPARK (U16FER9)	2	2	2	2	2	2		

44

2000.09.20 E

Page No.

Part catalogue structure

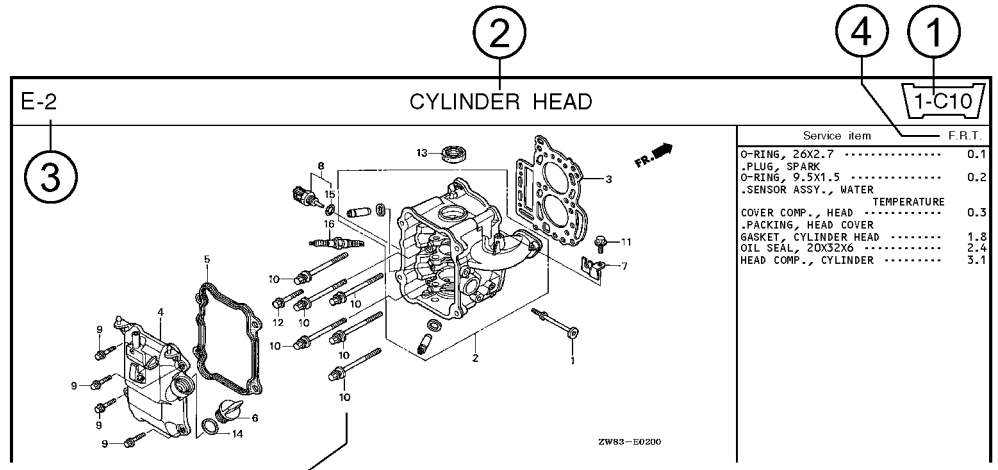

5 6 7 8 9 10 11 12 13 14

Ref. No.	Part No.	Description	Reqd. QTY BF 9.9D1	BFP 9.9D1	BF 10D1	BFP 10D1	BF 10B1	BFP 10B1	Serial No.	Parts catalogue code
1	12166-ZW9-000	STOPPER, ENGINE SIDE	2	2	2	2	2	2		
2	12210-ZW9-000ZA	HEAD COMP., CYLINDER *NH8*.....DARK GRAY	1	1	1	1	1	1		
3	12251-ZW9-003	GASKET, CYLINDER HEAD	1	1	1	1	1	1		
4	12310-ZW9-000	COVER COMP., HEAD	1	1	1	1	1	1		
5	12312-ZW9-000	PACKING, HEAD COVER	1	1	1	1	1	1		
6	15611-921-000	CAP, OIL ..... (NO GAUGE)	1	1	1	1	1	1		
7	16617-ZW9-000	HOLDER, CABLE	1	1	1	1	1	1	-------- --------	SC,SG
	16617-ZW9-010	.....	1	1	1	1	1	1	-------- 1001800	LHC,LHD

16 15 17

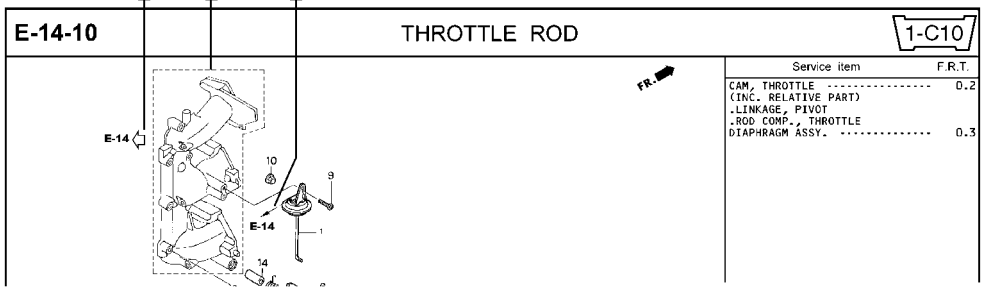

① Address number
- Address No. is provided (in place of the page No.) to help you refer to the part with the part No. or part name.

② Block title ③ Block number

④ Service item/Flat rate time

⑤ Reference number
- Title number marked with the parenthesis or parentheses indicates that it continues from the previous page.

⑥ Part number ⑦ Honda color code

⑧ Description

⑨ Assemblies
- Sections framed with broken lines in the exploded view drawings are available as complete assemblies. (Their individual parts can also be obtained.)

⑩ Color description

⑪ Note
- Notes are shown with the parentheses in the part name column.

⑫ Required quantity
- Required QTY shown in the parenthesis or parentheses indicates the optional part.
- Required QTY marked with “N” Indicates the optional part that should be selected as needed.
- Required QTY indicates the number of the part used in the block.

⑬ Serial number

⑭ Type
- When the type column is blank, it indicates that the part is applicable to all types.
- As the type of the actual unit may differ from the “parts catalogue, type” please refer to “Models, types and applicable serial numbers” for confirmation.

⑮
- Parts enclosed within a dotted line are covered in a different block.

⑯
- A hollow arrow indicates the block No. for the parts enclosed within a dotted line .

⑰
- A solid arrow indicates the block No. the part in question is connected to.

When the parts were revised

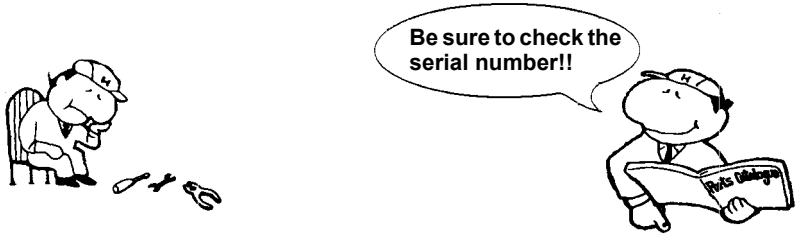

Ref. No.	Part No.	Description	Reqd. QTY BF 9.9D1	BFP 9.9D1	BF 10D1	BFP 10D1	BF 10B1	BFP 10B1	Serial No.
1	12166-ZW9-000	STOPPER, ENGINE SIDE	2	2	2	2	2	2	
2	12210-ZW9-000ZA	HEAD COMP., CYLINDER *NH8*.....DARK GRAY	1	1	1	1	1	1	
3	12251-ZW9-003	GASKET, CYLINDER HEAD	1	1	1	1	1	1	
4	12310-ZW9-000	COVER COMP., HEAD	1	1	1	1	1	1	
5	12312-ZW9-000	PACKING, HEAD COVER	1	1	1	1	1	1	
6	15611-921-000	CAP, OIL (NO GAUGE)	1	1	1	1	1	1	
7	16617-ZW9-000	HOLDER, CABLE (###)	1	1	1	1	1	1	-------- -------- SC,SG
	16617-ZW9-010		1	1	1	1	1	1	-------- 1001800 LHC,LHD
			1	1	1	1	1	1	1001801 -------- LHC,LHD

The number has been used from the initial model without revision.

When shown at the left side, it is applicable to the models of No.1001801 and the subsequent numbers.

When shown at the right side, it is applicable to the models up to No.1001800.

- The parts listed with "###" at the end of the parts name have limited supply period (parts not for sale).

Abbreviations used in the parts catalogue

- **The following abbreviations are used in the parts name column.**

A ..... Ampere
A.C. ..... Alternating current
ASSY. .... Assembly
AT. ..... Automatic transmission
C.D.I. ..... Capacitive discharge ignition
COMP. ... Complete
D.C. ..... Direct current
EX. ..... Exhaust
G.F.C.I ... Ground fault circuit interruptor
HEX. ..... Hexagonal
H.S.T. .... Hydrostatic transmission
FR. .....Front
IN. .....Inlet
L (100L) .Link (100 Links)
L. .....Left
MM .....Millimeter
MT. .....Manual Transmission
P.T.O. .....Power take off
R. .....Right
RR. .....Rear
STD. .....Standard
T (22T) ...Tooth (22 Teeth)
V .....Volt
W .....Watt

How to check the part block and serial numbers

Part block	Engine parts E-2~	Carburetor parts E-14	Frame parts F-1~
Numbers needed	Stamped engine number	Stamped carburetor identification number	Stamped frame number
Check point	①	②	③

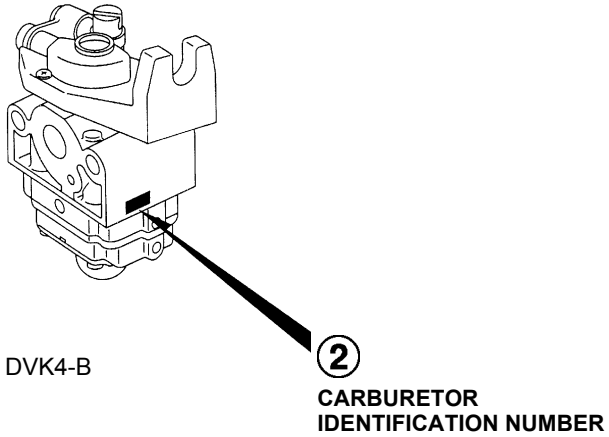

DVK4-B

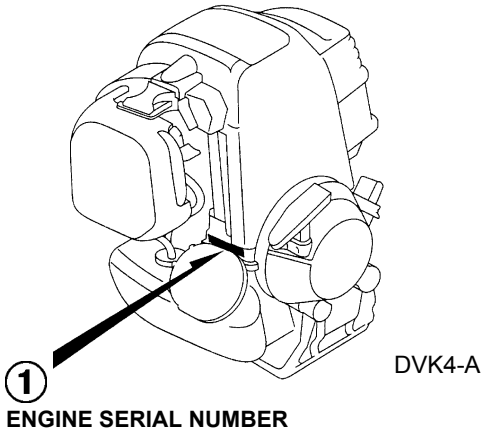

DVK4-A

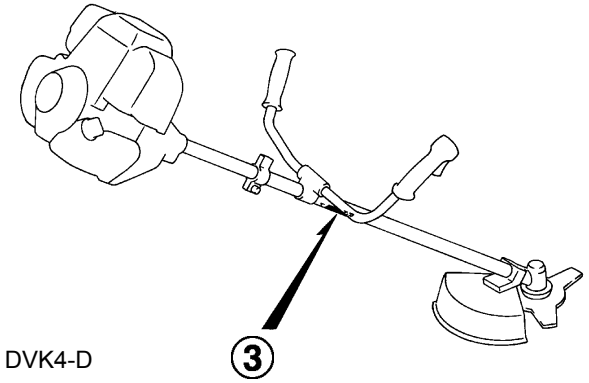

DVK4-D

Models, parts catalogue codes and applicable serial numbers

- **Models, parts catalogue codes and applicable serial Nos. given in this parts catalogue can be identified as follows.**

Model	Type	Parts catalogue type	Engine		Applicable engine serial No.	Applicable frame serial No.	Applicable carburetor identification No.
			Model	Type			
UMK435	UGCT	UGCT	GX35T	GY4	GCAMT-1000001~	HAGJ-2100001~	WYB 16C
	UT4C	UT4C	GX35		GCACM-1100001~	HAGJ-2000001~	WYB 16B / C

* Of carburetor identification numbers, only the portions underlined in the example below are used for registration.

WYB 16B

Fuel hose, general purpose hoses and vinyl hose

- The standard part fuel hose, general purpose hose and vinyl hose may be substituted by the coiled bulk part.
- When ordering the standard part fuel hose, general purpose hose and vinyl hose use the bulk part number written in the parts catalog in brackets ( ) underneath the part name.
- When exchanging the hose, cut and use at the specified length as mentioned in the part name.
  (For the method of cutting the bulk part, and method of filling out orders etc., please refer to the instructions issued with the bulk part.)

Bulk part number of fuel hose, general purpose hose and vinyl hose.

Example: 9 5 0 0 1 - 7 5 0 0 1 - 5 0 M

Bulk part number:
Refers to the bulk part.

Marking code (fuel hose and general purpose hose)
Change code (Vinyl hose)
Indicates number mark or change sequence, however, the code for the bulk part must be strictly 0 (zero).

Types of code:

• Fuel hose	2: Red outside braid (3 mm inside dia. only)	• General hose	1: Ash gray	• Vinyl hose	1: Clear
	5: Black inside braid		2: Ash gray		2: Black
	3: Red (3 mm inside dia. only)		3: Black		3: Light red
	4: Ash gray with red stripe (3 mm inside dia. only)		5: Black		6: Light red
	6: Black				7: Pale black

Lengths:
001: 1 m (standard)
003: 3 m
008: 8 m
} Application or specification of some parts is not settled.

I.D code: (fuel hose and general purpose hose)

30: 3.0 mm	50: 5.0 mm	70: 7.0 mm	11: 11 mm	12: 12 (outside dia. 17) mm
35: 3.5 mm	55: 5.3 mm, 5.5 mm	75: 7.3 mm, 7.5 mm	91: 12 (outside dia. 15) mm	14: 14 mm
45: 4.5 mm	65: 6.5 mm	80: 8.0 mm	92: 12 (outside dia. 16) mm	17: 17 mm

ID./OD. code: (vinyl hose)

01: ID. 2.9, OD. 6.8 mm	12: ID. 5.0, OD. 7.0 mm	21: ID. 8.0, OD. 9.0 mm	37: ID. 11.0, OD. 15.0 mm	50: ID. 16.0, OD. 19.0 mm
03: ID. 3.0, OD. 6.0 mm	10: ID. 5.0, OD. 8.0 mm	23: ID. 8.0, OD. 12.0 mm	38: ID. 12.0, OD. 13.0 mm	55: ID. 17.5, OD. 20.5 mm
05: ID. 3.5, OD. 6.5 mm	11: ID. 5.0, OD. 9.0 mm	25: ID. 9.0, OD. 11.0 mm	39: ID. 12.0, OD. 14.0 mm	60: ID. 22.0, OD. 27.0 mm
07: ID. 4.0, OD. 7.0 mm	14: ID. 6.0, OD. 9.0 mm	27: ID. 9.0, OD. 13.0 mm	40: ID. 12.0, OD. 16.0 mm	
08: ID. 4.5, OD. 6.5 mm	17: ID. 7.0, OD. 9.0 mm	33: ID. 10.0, OD. 14.0 mm	43: ID. 13.0, OD. 15.0 mm	
09: ID. 4.5, OD. 8.0 mm	19: ID. 7.0, OD. 11.0 mm	36: ID. 11.0, OD. 13.0 mm	45: ID. 14.0, OD. 18.0 mm	

Hose type:
1: Fuel hose
3: Vinyl hose
5: General hose

◎ **CAUTION: It is DANGEROUS to confuse the fuel hose with the general purpose hose or vinyl hose.**
Never use a general purpose hose or vinyl hose in place of a fuel hose or vice versa. Always use the correct bulk part in the parts catalogue, according to the service manual or the instructions issued with the bulk part.

ENGINE GROUP

B 8

2

E-2 C 1

CRANKCASE SET

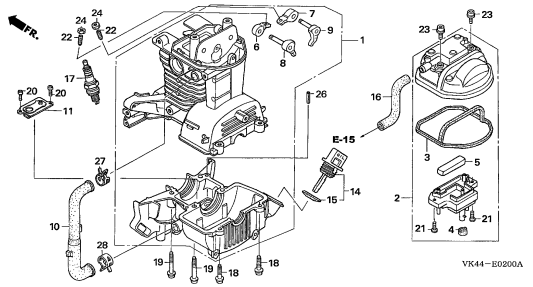

E-7 C 3

CRANKSHAFT/PISTON

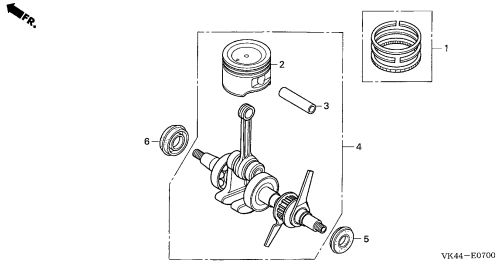

E-10 C 4

CAM PULLEY

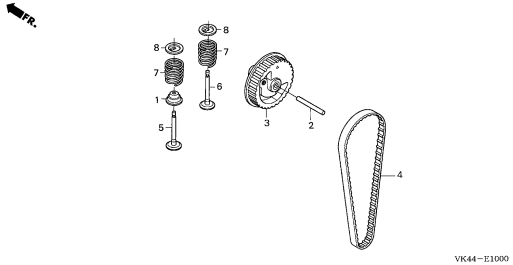

E-11 C 5

RECOIL STARTER

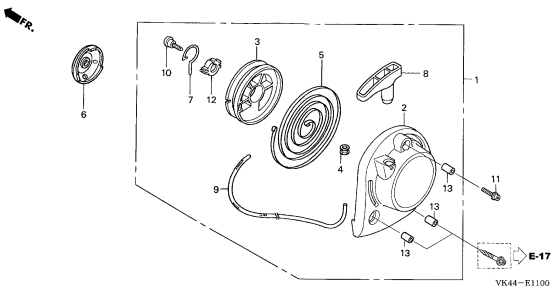

E-12 C 6

FAN COVER/CLUTCH

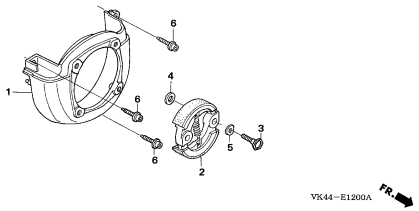

E-14 C 7

CARBURETOR

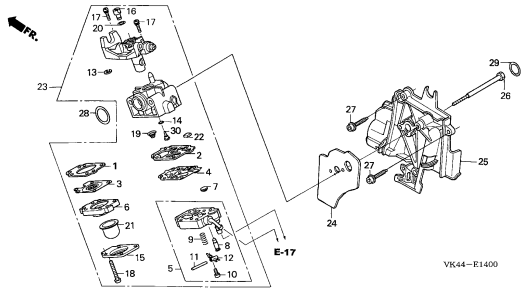

E-15 C 9

AIR CLEANER

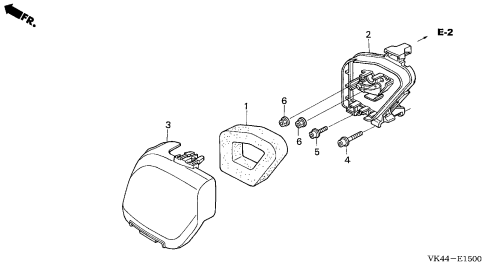

E-16 C10

MUFFLER

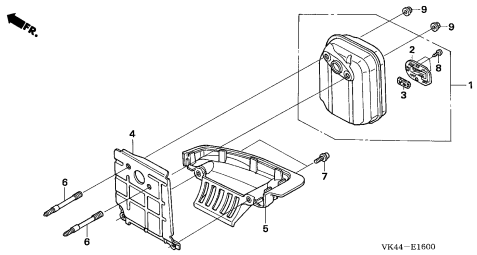

E-17 C11

FUEL TANK

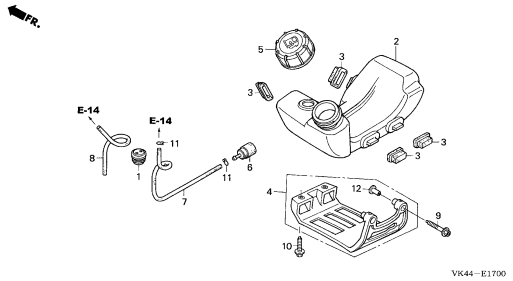

E-19 C12

FLYWHEEL

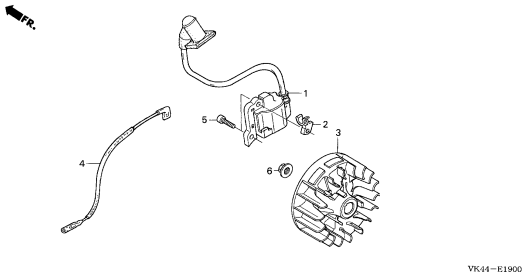

E-27 C13

TOP COVER

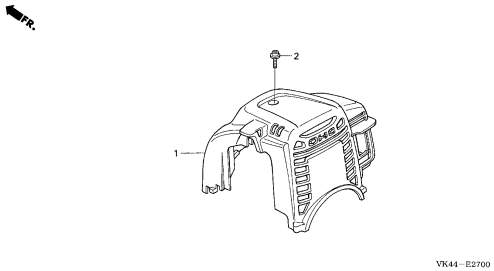

E-28 C14

LABEL

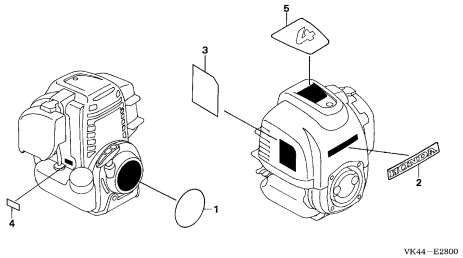

FRAME GROUP

B10

F-1 D 1

HANDLE PIPE/THROTTLE LEVER

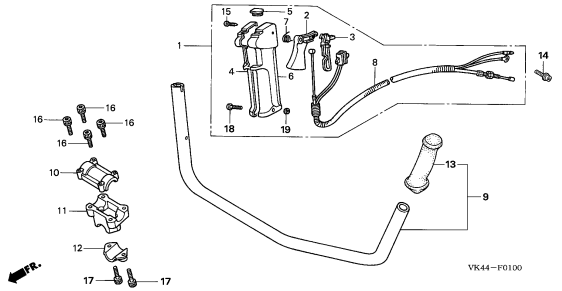

F-2 D 2

GEAR CASE

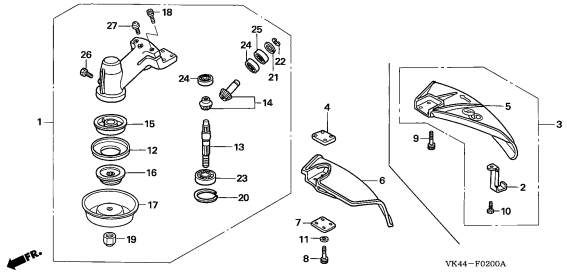

F-3 D 4

FRAME PIPE

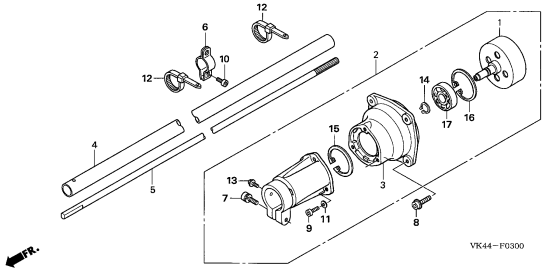

F-4 D 5

BLADE(NYLON/CUTTER BLADE)

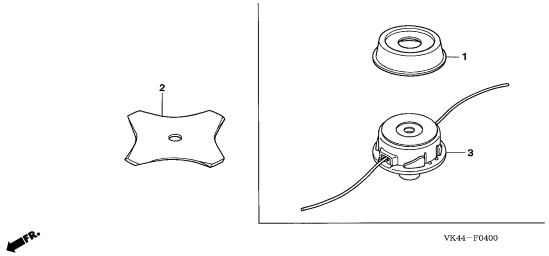

F-28 D 6

LABEL

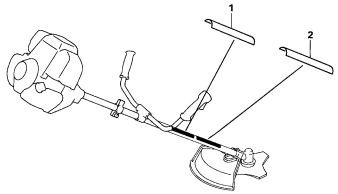

F-29 D 7

TOOL

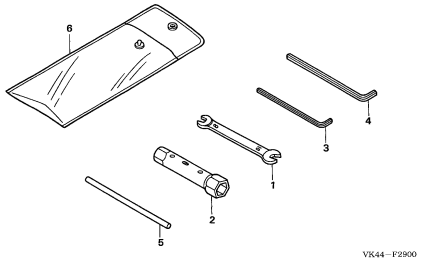

F-40 D 8

SHOULDER BELT

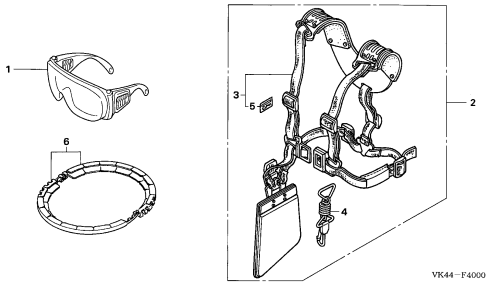

3

E-2 CRANKCASE SET

C 1

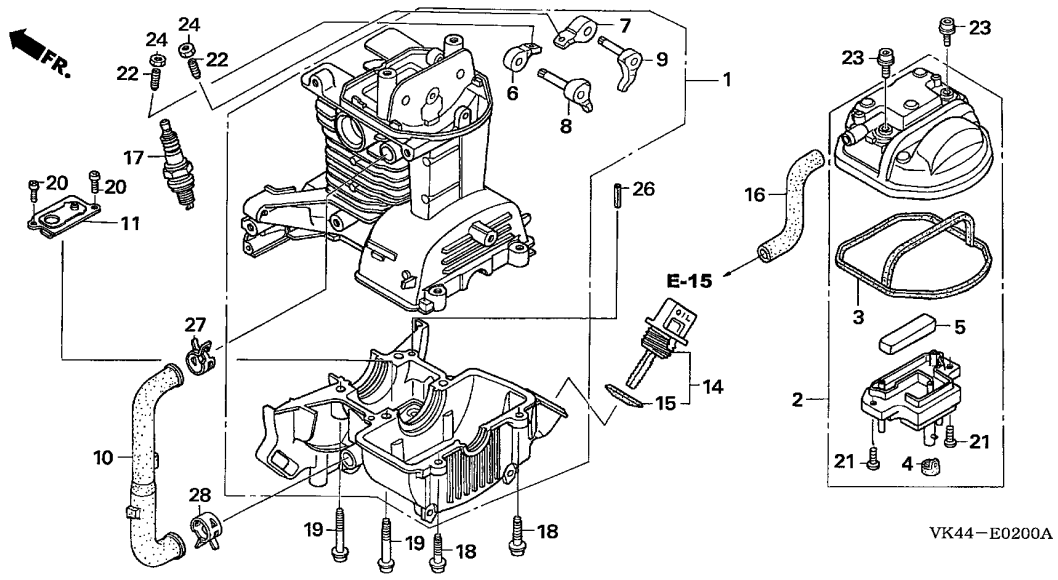

Service item	F.R.T.

Ref. No.	Part No.	Description	Reqd. QTY UMK 435	Serial No.	Parts catalogue code
1	10100-Z0Z-405	CRANKCASE SET	1	-------- 1183074	UT4C
	10100-Z3F-405		1	-------- --------	UGCT
			1	1183075 --------	UT4C
2	12310-Z0Z-000	COVER, CYLINDER HEAD	1		
3	12312-Z0Z-300	SEAL, HEAD COVER	1		
4	12314-Z0H-300	GROMMET, HEAD COVER	1		
5	12367-Z0H-000	FILTER, BREATHER	1		
6	14431-Z0H-003	ARM, IN. VALVE ROCKER	1		
7	14441-Z0H-003	ARM, EX. VALVE ROCKER	1		
8	14730-Z0Z-000	LIFTER COMP., IN. VALVE	1		
9	14740-Z0Z-000	LIFTER COMP., EX. VALVE	1		
10	15422-Z0Z-000	TUBE, OIL	1		
11	15510-Z0H-000	PLATE ASSY., OIL OUTLET VALVE	1	-------- --------	UT4C
	15510-Z3E-000		1	-------- --------	UGCT
14	15600-ZM3-003	CAP ASSY., OIL FILLER	1	-------- --------	UT4C
	15600-Z3F-000		1	-------- --------	UGCT
15	15625-ZE1-003	PACKING, OIL FILLER CAP	1	-------- --------	UT4C
	15625-Z0T-800		1	-------- --------	UGCT
16	15721-Z0Z-000	TUBE, BREATHER	1		
17	31915-Z0H-003	PLUG, SPARK (CMR5H)(NGK)	1		
	31914-Z0H-003	PLUG, SPARK (CMR4H)(NGK)	(1)		
	31916-Z0H-003	PLUG, SPARK (CMR6H)(NGK)	(1)		
18	90009-Z0H-003	BOLT, SOCKET, 5X20	2		
19	90010-Z0Z-003	BOLT, SOCKET, 5X32	4		
20	90013-Z0H-004	SCREW, PAN, 4X8	2		

CRANKCASE SET

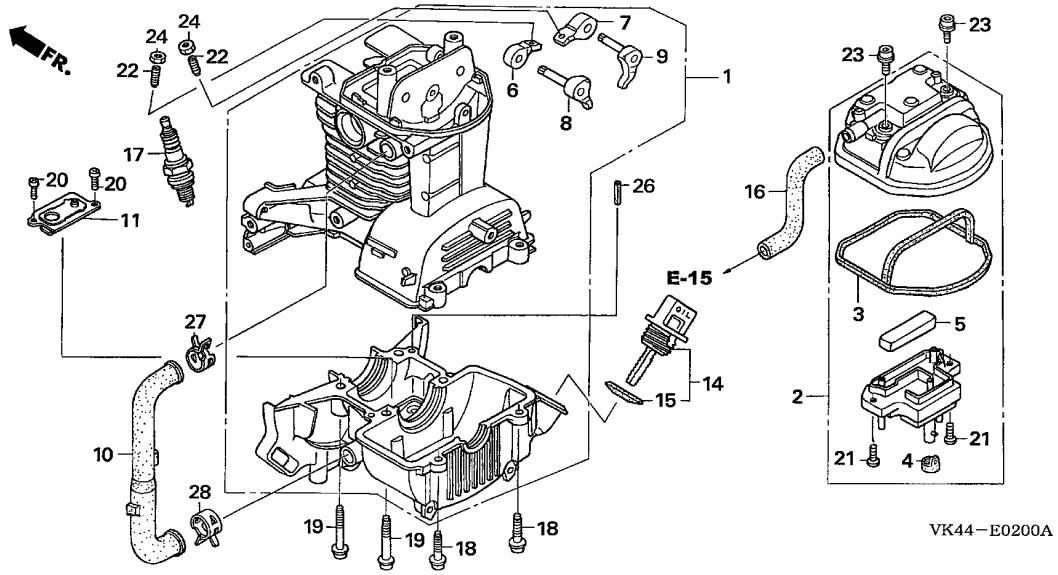

Ref. No.	Part No.	Description	Reqd. QTY UMK 435	Serial No.	Parts catalogue code
21	90013-Z0Z-003	SCREW, PAN, 4X8	2		
22	90017-Z0H-000	SCREW, TAPPET ADJUSTING	2		
23	90019-Z0H-003	BOLT, SOCKET, 5X12	2		
24	90206-ZM3-000	NUT, TAPPET ADJUSTING	2		
26	94305-40102	PIN, SPRING, 4X10	1		
27	95002-41200-08	CLAMP, TUBE (D12)	1		
28	95002-41300-04	CLAMP, TUBE (D13)	1		

E-7 CRANKSHAFT/PISTON

C 3

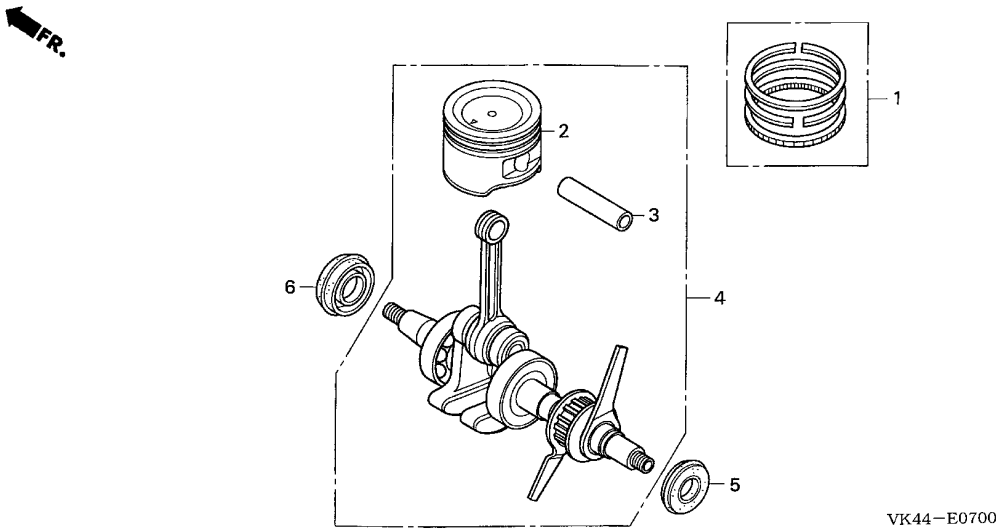

Service item	F.R.T.

Ref. No.	Part No.	Description	Reqd. QTY UMK 435	Serial No.	Parts catalogue code
1	13010-ZM5-000	RING SET, PISTON	1		
2	13101-Z0Z-000	PISTON	1		
3	13111-ZM5-000	PIN, PISTON	1		
4	13310-Z0Z-000	CRANKSHAFT COMP.	1		
5	91212-Z0H-003	OIL SEAL, 10X20X5	1	-------- --------	UT4C
	91212-Z3E-000		1	-------- --------	UGCT
6	91214-ZM3-003	OIL SEAL, 15X25X6	1	-------- --------	UT4C
	91214-Z3F-000		1	-------- --------	UGCT

2

E-10 CAM PULLEY

C 4

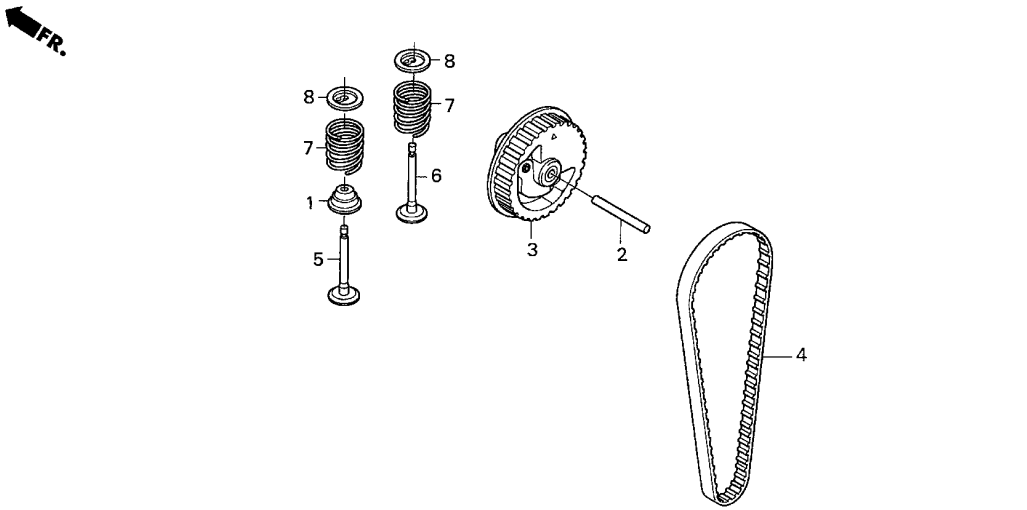

Service item	F.R.T.

Ref. No.	Part No.	Description	Reqd. QTY UMK 435	Serial No.	Parts catalogue code
1	12209-ZOH-003	SEAL, VALVE STEM ·····	1	-------- 1183074	UT4C
	12209-Z3E-000	·····	1	-------- --------	UGCT
			1	1183075 --------	UT4C
2	14126-ZOZ-003	ROLLER, 4X31.8 ·····	1		
3	14320-ZOZ-000	PULLEY COMP., CAMSHAFT ·····	1		
4	14400-ZOZ-003	BELT, TIMING (76ZU7 G-300) ··	1		
5	14711-ZOZ-000	VALVE, IN. ·····	1	-------- 1183074	UT4C
	14711-ZOZ-800	·····	1	-------- --------	UGCT
			1	1183075 --------	UT4C
6	14721-ZOZ-000	VALVE, EX. ·····	1	-------- 1183074	UT4C
	14721-ZOZ-800	·····	1	-------- --------	UGCT
			1	1183075 --------	UT4C
7	14751-ZOZ-000	SPRING, VALVE ·····	2		
8	14771-ZOH-000	RETAINER, VALVE SPRING ·····	2		

E-11 RECOIL STARTER

C 5

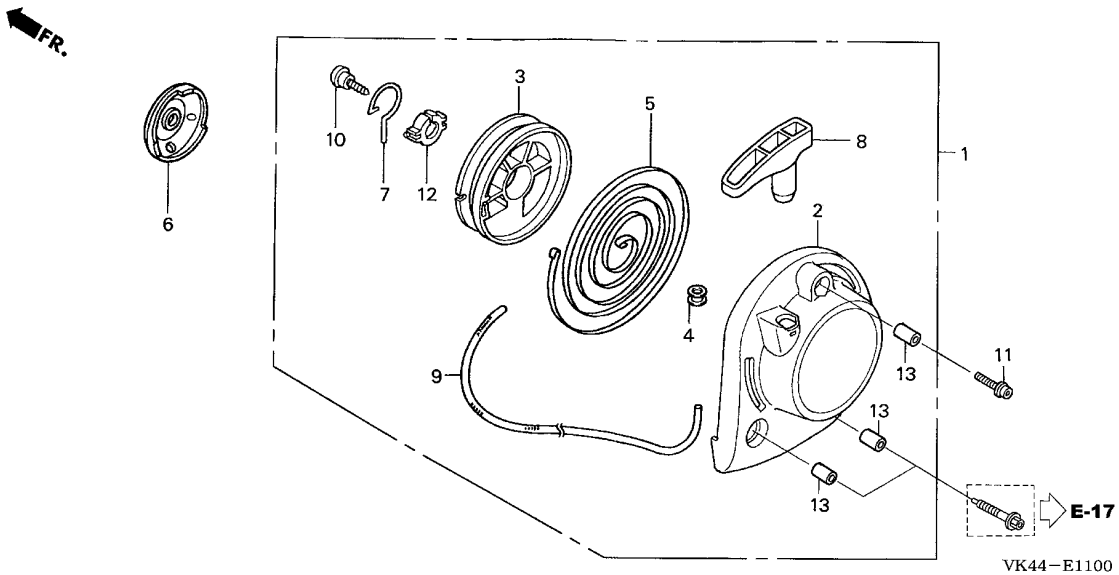

Service item	F.R.T.

Ref. No.	Part No.	Description	Reqd. QTY UMK 435	Serial No.	Parts catalogue code
1	28400-Z0Z-003	STARTER ASSY., RECOIL -------	1		
2	28414-Z0Z-000	CASE, RECOIL STARTER --------	1		
3	28421-ZM3-003	REEL, RECOIL STARTER --------	1		
4	28433-ZM3-003	GUIDE, ROPE ----------	1		
5	28442-ZM3-003	SPRING, RECOIL STARTER ------	1		
6	28451-Z0H-003	PULLEY, RECOIL STARTER ------	1		
7	28459-Z0H-003	ARM, SWING ----------	1		
8	28461-ZM3-003	KNOB, RECOIL STARTER --------	1		
9	28462-ZM3-003	ROPE, RECOIL STARTER --------	1		
10	90012-ZM3-003	SCREW, SETTING ----------	1		
11	90018-Z0H-003	BOLT, SOCKET, 5X16 ----------	1		
12	91504-ZM3-003	COLLAR ----------	1		
13	91506-ZM3-000	COLLAR A, HEAD COVER --------	3		

E-12 FAN COVER/CLUTCH

C 6

Service item	F.R.T.

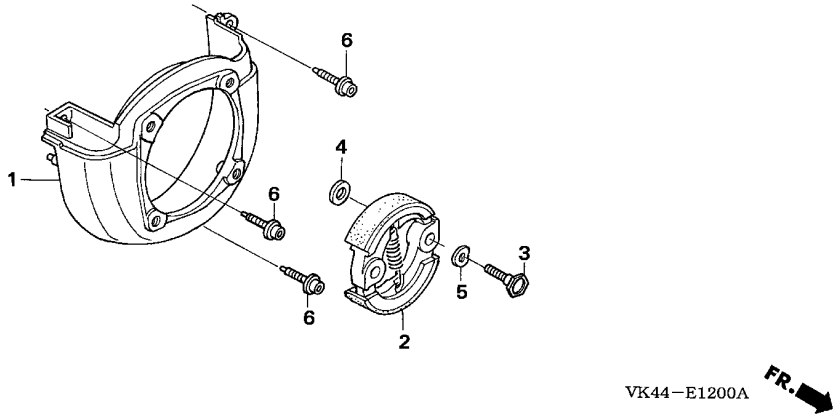

Ref. No.	Part No.	Description	Reqd. QTY UMK 435	Serial No.	Parts catalogue code
1	19611-Z0Z-000	COVER, FAN	1		
2	22000-Z0Z-003	CLUTCH ASSY.	1		
3	22253-Z0Z-003	BOLT, CLUTCH (8MM)	2	-------- --------	UT4C
	22253-Z3F-000		2	-------- --------	UGCT
4	22254-ZM5-003	WASHER, CLUTCH (8X17)	2	-------- --------	UT4C
	22254-Z3F-000		2	-------- --------	UGCT
5	22254-Z0Z-003	WASHER, WAVE (10MM)	2	-------- --------	UT4C
	22255-Z3F-000		2	-------- --------	UGCT
6	90009-Z0H-003	BOLT, SOCKET, 5X20	3		

CARBURETOR

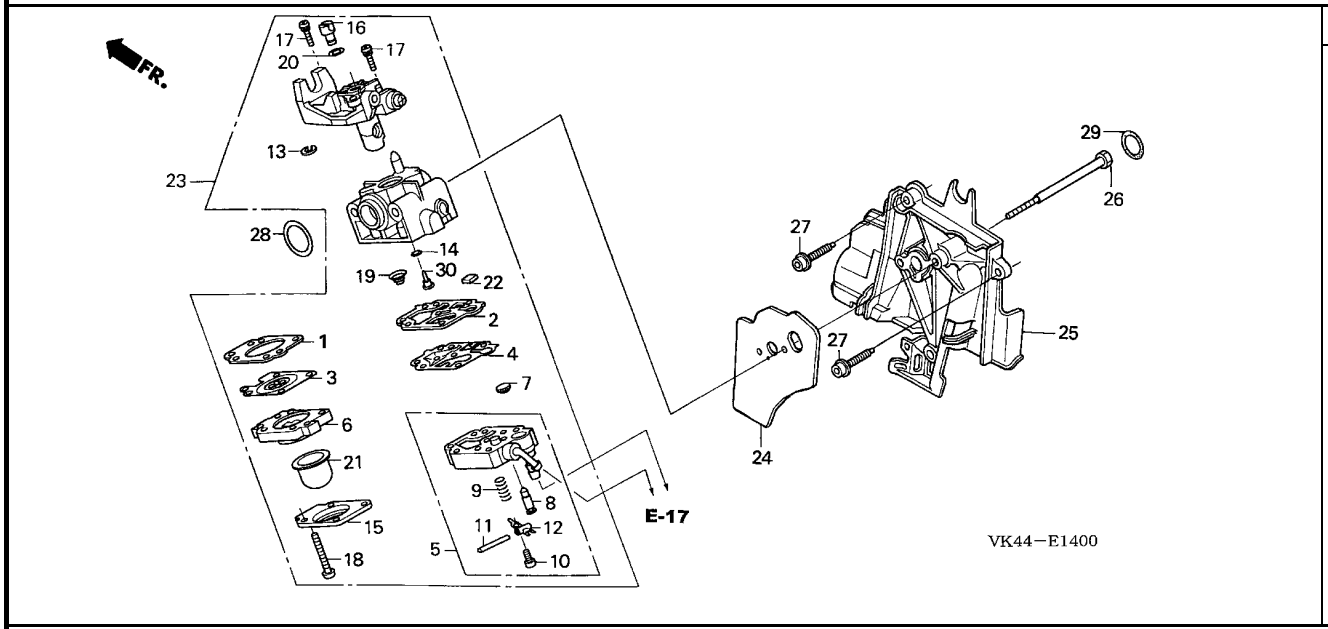

Service item	F.R.T.

Ref. No.	Part No.	Description	Reqd. QTY UMK 435	Serial No.	Parts catalogue code
1	16010-ZM3-004	GASKET, METERING DIAPHRAGM --	1		
2	16011-ZOH-003	GASKET, PUMP ----------			
		(CARBURETOR NO.)	1	-------- WYB 16B	UT4C
	16011-ZOH-013	----------	1	-------- --------	UGCT
		(CARBURETOR NO.)	1	WYB 16C --------	UT4C
3	16013-ZOH-003	DIAPHRAGM ASSY., METERING ---	1		
4	16014-ZM3-004	DIAPHRAGM, PUMP ----------	1		
5	16015-ZOH-003	BODY ASSY., PUMP ----------			
		(CARBURETOR NO.)	1	-------- WYB 16B	UT4C
	16015-ZOH-013	----------	1	-------- --------	UGCT
		(CARBURETOR NO.)	1	WYB 16C --------	UT4C
6	16017-ZM3-004	BODY ASSY., AIR PURGE -------	1		
7	16018-ZM3-802	SCREEN, INLET ----------	1		
8	16019-ZM3-004	VALVE, INLET NEEDLE ---------	1		
9	16020-ZM3-004	SPRING, METERING LEVER ------	1		
10	16021-ZM3-004	SCREW, METERING LEVER PIN ---	1		
11	16022-ZM3-014	PIN, METERING LEVER ---------	1		
12	16023-ZM3-004	LEVER, METERING ----------	1		
13	16024-ZOH-003	RING, RETAINING ----------	1		
14	16025-ZM3-004	O-RING ----------	1		
15	16026-ZM3-004	COVER, PRIMER PUMP ----------	1		
16	16027-ZM3-004	SWIVEL ----------	1		
17	16028-ZM3-004	SCREW, THROTTLE COLLAR ------	2		
18	16029-ZM3-004	SCREW, PUMP COVER ----------	4		
19	16030-ZM3-004	SPRING, PUMP ----------	1		
20	16031-ZM3-004	WASHER ----------	1		

CARBURETOR

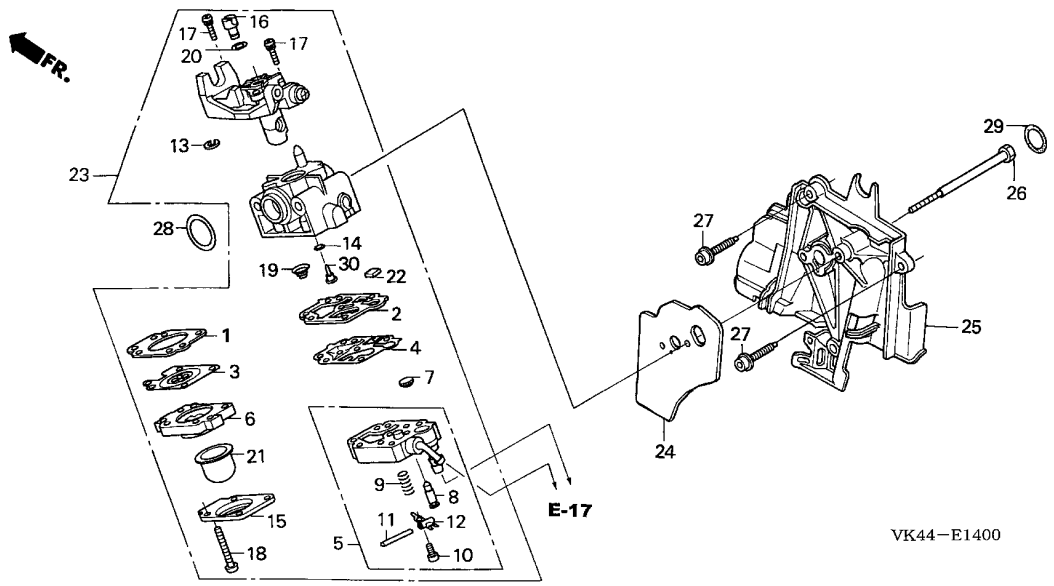

Ref. No.	Part No.	Description	Reqd. QTY UMK 435	Serial No.	Parts catalogue code
21	16032-ZM3-004	PUMP, PRIMER	1		
22	16035-ZM3-802	FILTER, FUEL INLET	1		
23	16100-ZOZ-024	CARBURETOR ASSY. (WYB 16B) ..	1	-------- 1168438	UT4C
	16100-ZOZ-034	CARBURETOR ASSY. (WYB 16C) ..	1	-------- --------	UGCT
			1	1168439 --------	UT4C
24	16221-ZOZ-000	PACKING, CARBURETOR	1		
25	19631-ZOZ-010	SHROUD	1		
26	90014-ZOH-003	BOLT, 5X53	2		
27	90018-ZOH-003	BOLT, SOCKET, 5X16	2		
28	91301-ZM3-000	O-RING, 14.8X2.4	1		
29	91308-ZOH-003	O-RING, 12.3X2.4	1	-------- --------	UT4C
	91308-Z3E-000	.....	1	-------- --------	UGCT
30	99101-ZOZ-0370	JET (#37)	1		
	99101-ZM5-0350	JET (#35)	(1)		
	99101-ZOZ-0360	JET (#36)	(1)		

E-15 AIR CLEANER

C 9

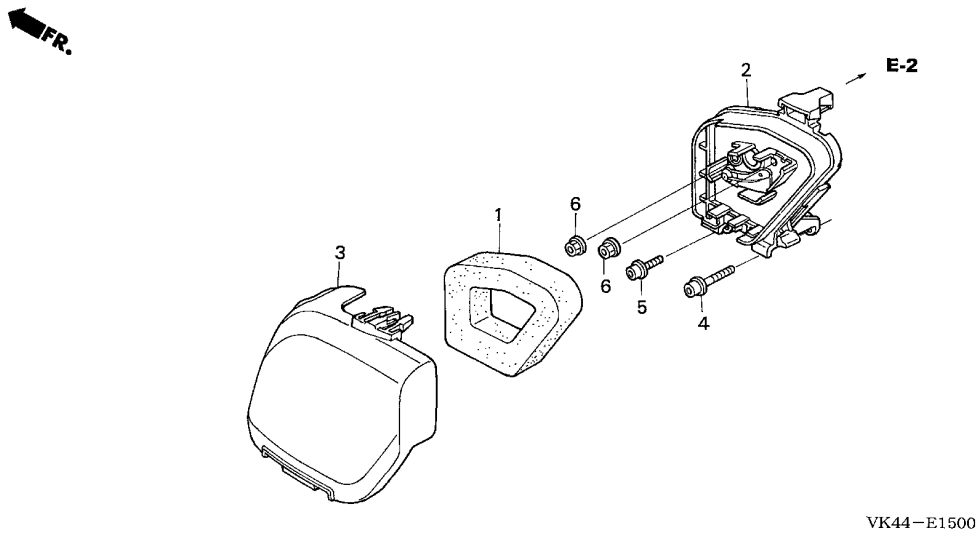

Service item	F.R.T.

Ref. No.	Part No.	Description	Reqd. QTY UMK 435	Serial No.	Parts catalogue code
1	17211-Z0Z-000	ELEMENT, AIR CLEANER	1		
2	17220-Z0Z-000	CASE COMP., AIR CLEANER	1		
3	17231-Z0Z-000	COVER, AIR CLEANER	1		
4	90009-Z0Z-003	BOLT, SOCKET, 5X25	1		
5	90018-Z0H-003	BOLT, SOCKET, 5X16	1		
6	94050-05000	NUT, FLANGE, 5MM	2		

2

E-16 MUFFLER

C10

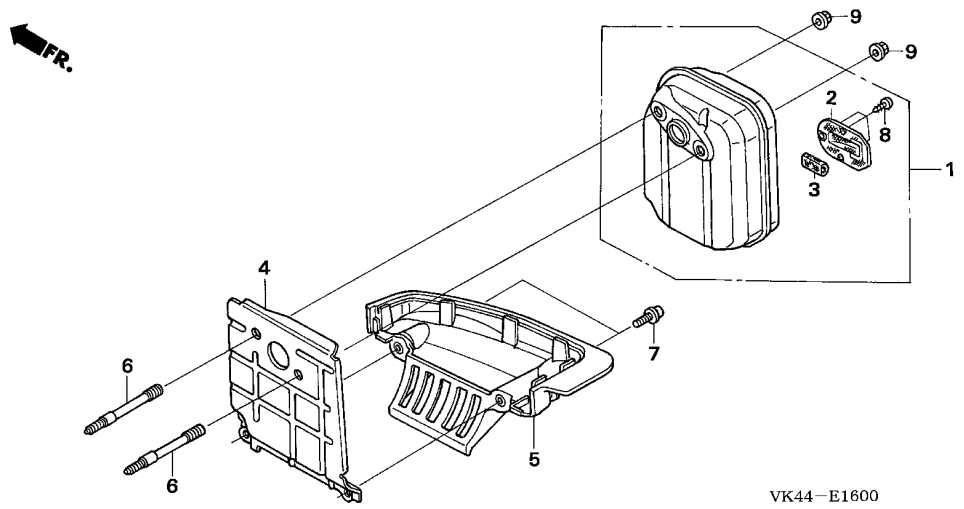

Service item	F.R.T.

Ref. No.	Part No.	Description	Reqd. QTY UMK 435	Serial No.	Parts catalogue code
1	18310-Z0Z-801	MUFFLER COMP. (ARRESTER) ----	1		
2	18350-Z0Z-800	ARRESTER COMP., SPARK -------	1		
3	18354-Z0Z-800	FILTER, EXHAUST ----------	1		
4	18515-Z0Z-300	GUIDE, AIR ----------	1		
5	18518-Z0Z-000	GUIDE COMP., UNDER AIR ------	1	-------- 1186547	UT4C
	18518-Z0Z-010	----------	1	1186548 --------	UT4C
	18518-Z0Z-020	----------	1	-------- --------	UGCT
6	90001-Z0Z-003	BOLT, STUD 2,5X45.5 ---------	2		
7	90018-Z0H-003	BOLT, SOCKET, 5X16 ----------	2		
8	90055-ZE1-000	SCREW, TAPPING, 4X6 ---------	3		
9	90136-SM4-901	NUT, SELF-LOCK, 5MM ---------	2		

E-17 FUEL TANK

C11

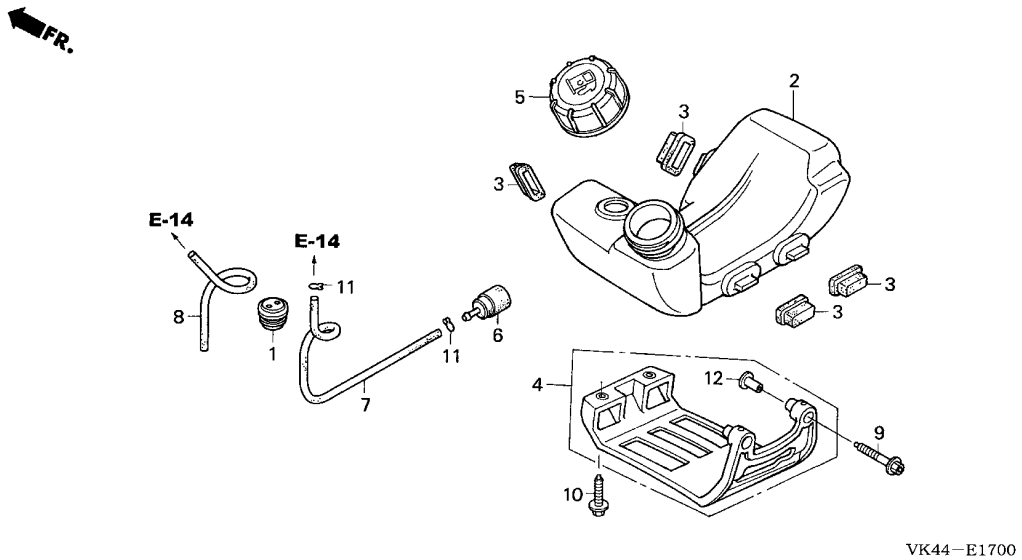

Service item	F.R.T.

Ref. No.	Part No.	Description	Reqd. QTY UMK 435	Serial No.	Parts catalogue code
1	17504-ZM3-003	GROMMET, FUEL TUBE	1		
2	17511-ZOZ-013	TANK, FUEL	1		
3	17533-ZOH-000	RUBBER, TANK MOUNTING	4		
4	17555-ZOZ-000	GUARD, TANK	1		
5	17620-ZM3-053	CAP ASSY., FUEL TANK	1		
6	17672-ZOH-003	FILTER, FUEL	1		
7	17701-ZOZ-000	TUBE, FUEL TANK	1		
8	17702-ZOZ-000	TUBE, FUEL RETURN	1		
9	90010-ZOH-003	BOLT, SOCKET, 5X30	2		
10	90018-ZOH-003	BOLT, SOCKET, 5X16	2		
11	91401-ZM3-003	CLIP, TUBE	2		
12	91501-ZOH-000	COLLAR, TANK GUARD	2		

E-19 FLYWHEEL

C12

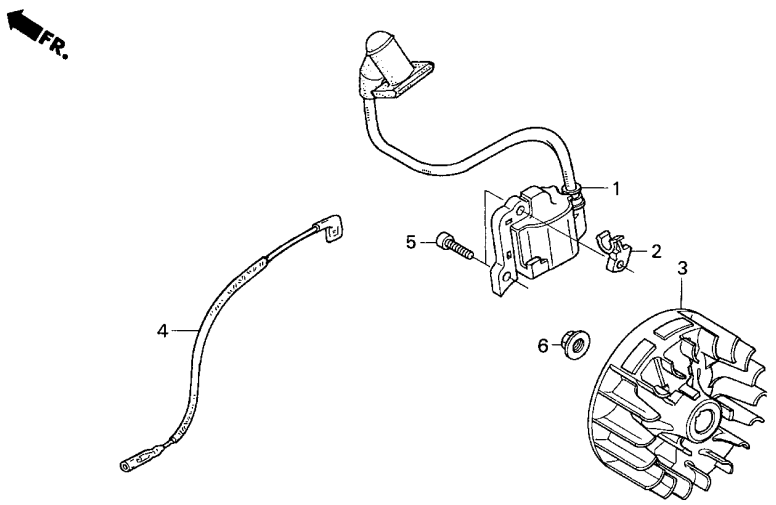

VK44−E1900

Service item	F.R.T.

Ref. No.	Part No.	Description	Reqd. QTY UMK 435	Serial No.	Parts catalogue code
1	30500-Z0Z-013	COIL ASSY., IGNITION	1	-------- --------	UT4C
	30500-Z3F-003		1	-------- --------	UGCT
2	30522-Z0Z-000	CLIP, HIGH TENSION CORD	1	-------- --------	UT4C
	30522-Z3F-000		1	-------- --------	UGCT
3	31110-Z0Z-003	FLYWHEEL COMP.	1	-------- --------	UT4C
	31110-Z3F-003		1	-------- --------	UGCT
4	32195-Z0Z-J00	CORD, STOP SWITCH	1		
5	90012-Z0H-005	BOLT, SOCKET, 4X14	2		
6	94050-08000	NUT, FLANGE, 8MM	1		

E-27 TOP COVER

C13

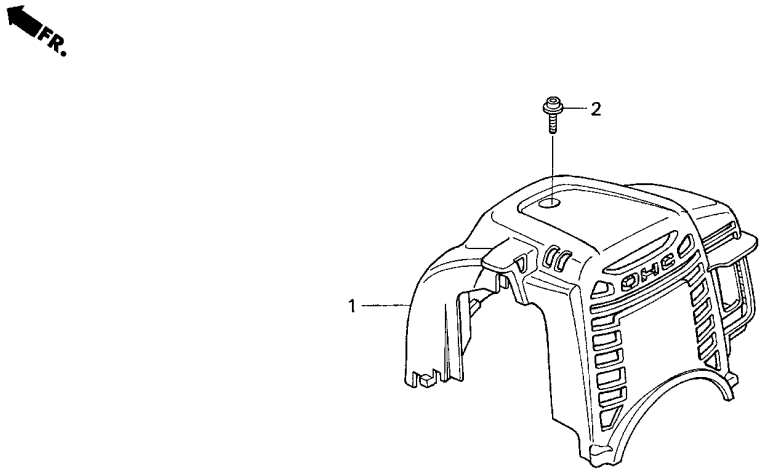

VK44−E2700

Service item	F.R.T.

Ref. No.	Part No.	Description	Reqd. QTY UMK 435	Serial No.	Parts catalogue code
1	19720-Z0Z-000ZA	COVER COMP., TOP *R280*.....POWER RED	1		
2	90015-Z0H-003	BOLT, TOP COVER	1		

2

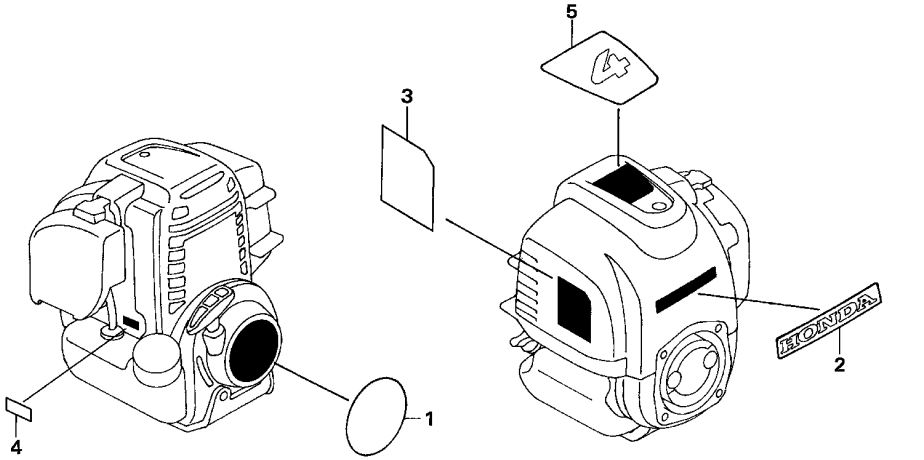

VK44−E2800

Service item	F.R.T.

Ref. No.	Part No.	Description	Reqd. QTY UMK 435	Serial No.	Parts catalogue code
1	87521-Z0Z-000	MARK, EMBLEM	1	-------- --------	UT4C
	87521-Z3F-000		1	-------- --------	UGCT
2	87531-Z0Z-000	MARK, HONDA	1		
3	87594-Z0H-J20	MARK, OIL CAUTION (E)	1		
	87594-Z0H-J30	MARK, OIL CAUTION (F)	1		
4	87601-Z0H-J50	MARK, TYPE (GY4)	1		
5	87660-Z0Z-J00	MARK (4-STROKE)	1		

F-1 HANDLE PIPE/THROTTLE LEVER

D 1

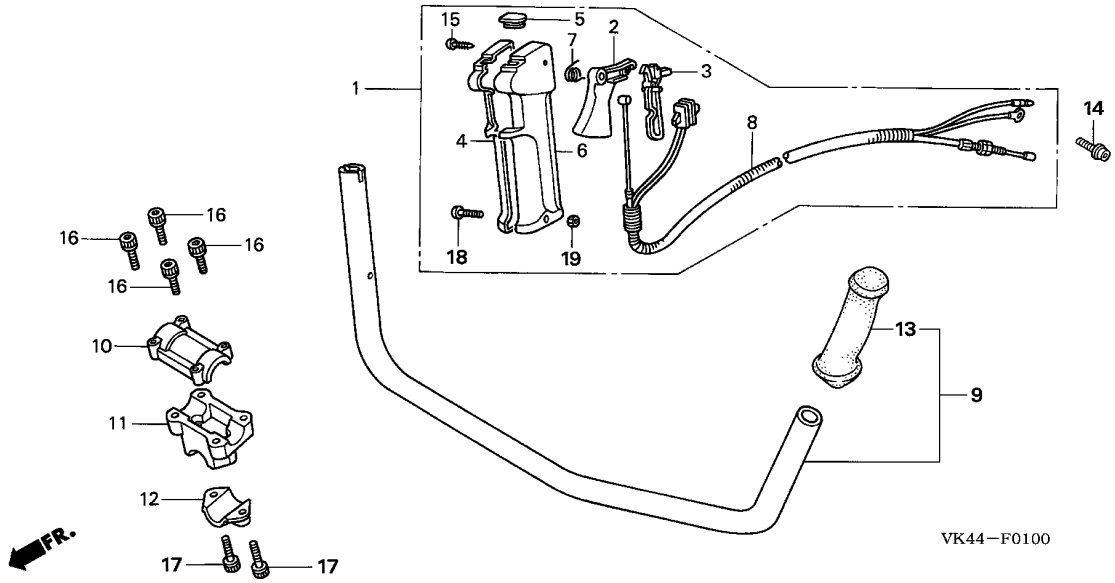

Service item	F.R.T.

Ref. No.	Part No.	Description	Reqd. QTY UMK 435	Serial No.	Parts catalogue code
1	17850-VK4-M01	LEVER ASSY., THROTTLE(U) ----	1		
2	17851-VH8-761	LEVER, THROTTLE (YELLOW) ----	1		
3	17852-VH8-641	LEVER, THROTTLE LOCK (YELLOW)	1		
4	17853-VF9-V31	GRIP, R. THROTTLE LEVER -----	1		
5	17854-VF9-V31	CAP, THROTTLE LEVER ---------	1		
6	17856-VF9-V31	GRIP, L. THROTTLE LEVER -----	1		
7	17859-VF9-V31	SPRING, THROTTLE LEVER ------	1		
8	32100-VF9-V31	HARNESS ASSY., WIRE ---------	1		
9	53110-VK4-M00	PIPE ASSY., HANDLE ----------	1		
10	53136-VF9-A01	HOLDER A, HANDLE -----------	1		
11	53137-VF9-A01	HOLDER B, HANDLE -----------	1		
12	53138-VF9-A01	HOLDER C, HANDLE -----------	1		
13	53166-VF9-660	GRIP, L. HANDLE ------------	1		
14	90011-Z0H-811	BOLT, SOCKET, 5X9 ----------	1		
15	90101-VF9-V31	SCREW, TAPPING, 4X20 --------	2		
16	90101-VK4-M01	BOLT, SOCKET, 6X25 ----------	4		
17	90102-VK4-M01	BOLT, SOCKET, 6X30 ----------	2		
18	93500-05030-0G	SCREW, PAN, 5X30 -----------	1		
19	94002-05070-0S	NUT, HEX., 5MM -------------	1		

3

F-2 GEAR CASE

D 2

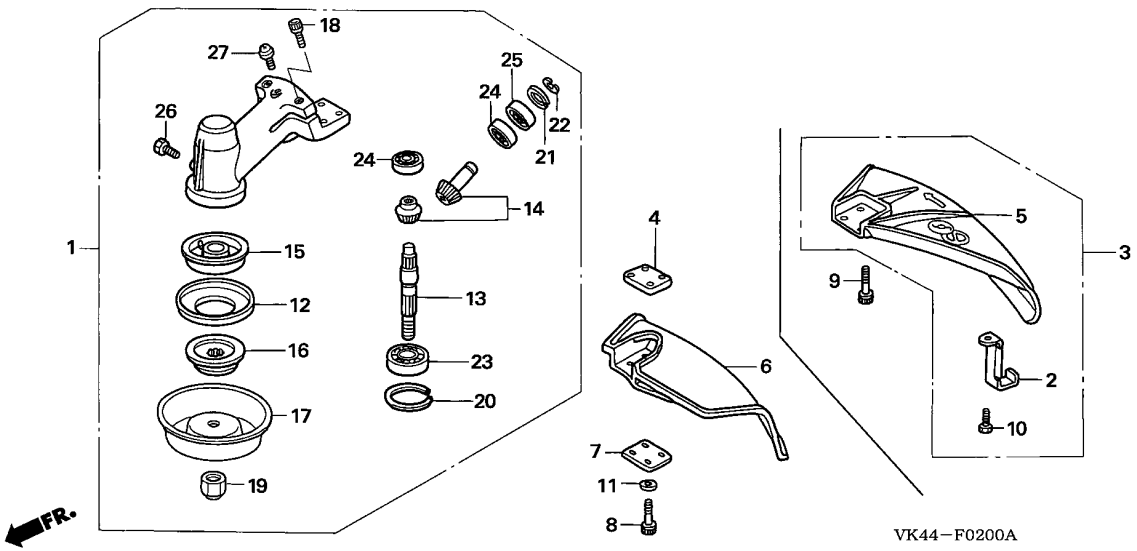

Service item	F.R.T.

Ref. No.	Part No.	Description	Reqd. QTY UMK 435	Serial No.	Parts catalogue code
1	41100-VK4-M01	CASE COMP., GEAR	1		
2	72571-VF9-K01	PLATE, NYLON CUTTING	1		
3	76240-VF9-K01	DEFLECTOR ASSY., GRASS	1		
4	76242-VF9-V30	SPACER, DEFLECTOR	1		
5	76247-VF9-E31	DEFLECTOR, GRASS	1		
6	76247-VF9-J01	DEFLECTOR, GRASS	1		
7	76259-VF9-J01	PLATE, DEFLECTOR	1		
8	90101-VJ3-681	BOLT, SOCKET, 5X20	4		
9	90109-VF9-J00	BOLT, SOCKET, 5X30	4		
10	90112-VF9-J01	BOLT, SOCKET, 5X15	1		
11	94101-05000	WASHER, PLAIN, 5MM	4		
12	21912-VF9-J01	GUARD, GRASS	1		
13	41123-VF9-B01	SHAFT, GEAR	1		
14	41125-VF9-B01	GEAR ASSY., BEVEL	1		
15	72611-VF9-J01	HOLDER A, BLADE	1		
16	72621-VF9-003	HOLDER B, BLADE	1		
17	72623-VF9-A01	COVER, NUT	1		
18	90102-VF9-003	BOLT, SOCKET, 5X20	2		
19	90301-VF9-A01	NUT, HEX., 10MM	1		
20	90652-VF9-A01	CIRCLIP, INTERNAL, 28MM	1		
21	90654-VF9-B01	CIRCLIP, INTERNAL, 26MM	1		
22	90655-VF9-B01	CIRCLIP, EXTERNAL, 10MM	1		
23	91053-VF9-A01	BEARING, RADIAL BALL, 6001LL	1		
24	91055-VF9-B01	BEARING, RADIAL BALL, 6000	2		
25	91056-VF9-B01	BEARING, RADIAL BALL, 6000Z	1		

F-2 GEAR CASE

D 3

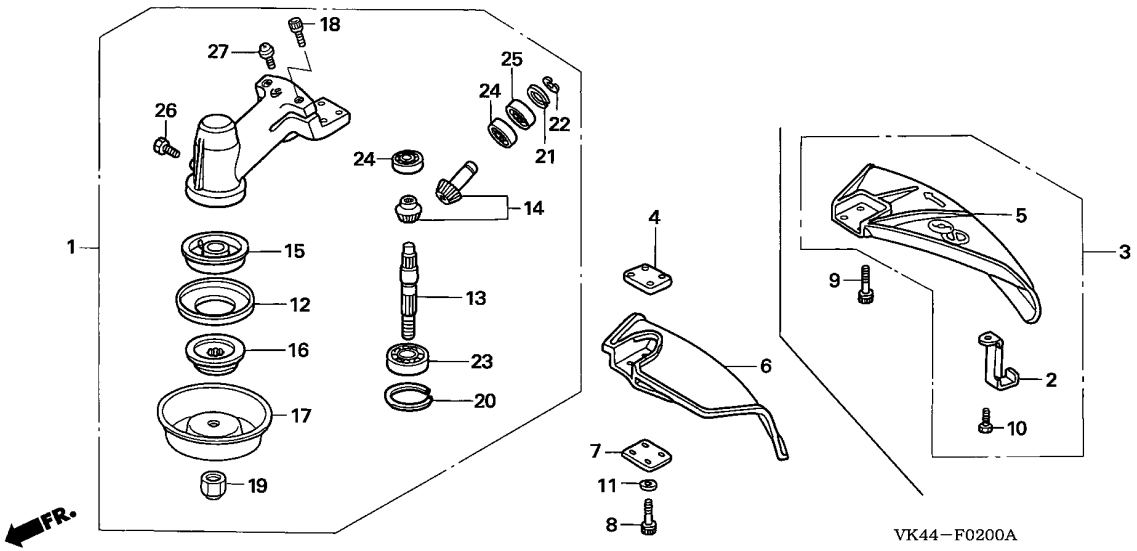

Ref. No.	Part No.	Description	Reqd. QTY UMK 435	Serial No.	Parts catalogue code
26	93301-06008-0A	BOLT, HEX., 6X8 ----------	1		
27	93892-05010-07	SCREW-WASHER, 5X10 ----------	1		

3

F-3 FRAME PIPE

D 4

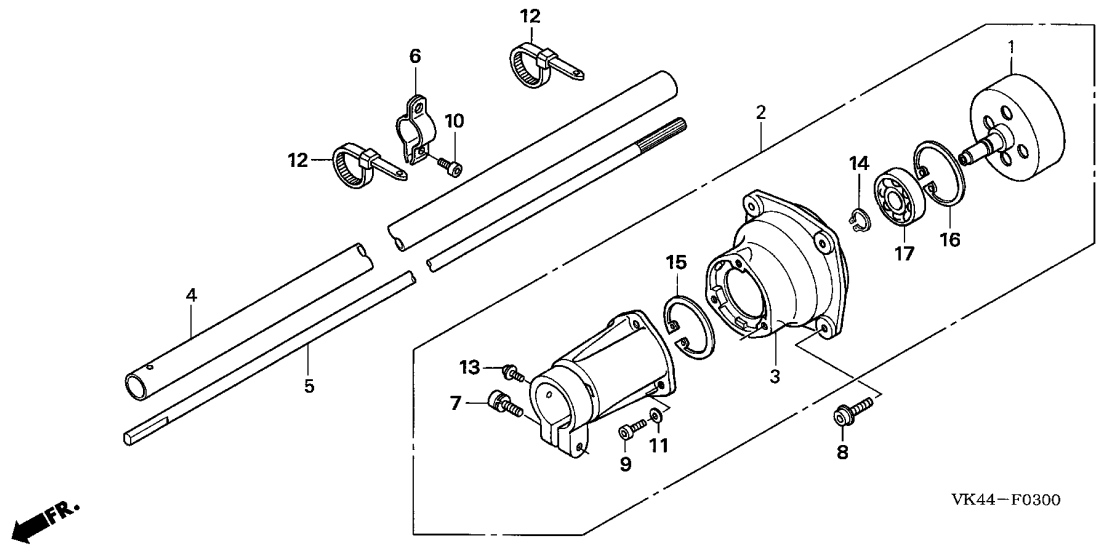

Service item	F.R.T.

3

Ref. No.	Part No.	Description	Reqd. QTY UMK 435	Serial No.	Parts catalogue code
1	22100-VK4-M00	OUTER COMP., CLUTCH	1		
2	22260-VK4-M01	HOUSING ASSY., CLUTCH	1		
3	22261-VK4-003	HOUSING, CLUTCH	1		
4	40230-VK4-M01	PIPE ASSY., FRAME	1		
5	41411-VK4-M01	SHAFT, DRIVE	1		
6	50374-VF9-B01	HOLDER, HANGER	1		
7	90101-VK4-003	BOLT, SOCKET, 6X20	1		
8	90102-VK4-000	BOLT, FLANGE SOCKET, 6X20	4		
9	90103-VK4-003	BOLT, SOCKET, 5X20	3		
10	90105-VJ8-C01	BOLT, SOCKET, 6X15	1		
11	90401-VK4-003	WASHER, 5MM	3		
12	90651-MA6-720	BAND, WIRE HARNESS	2		
13	93892-05010-07	SCREW-WASHER, 5X10	1		
14	94510-15000	CIRCLIP, EXTERNAL, 15MM	1		
15	94510-30000	CIRCLIP, EXTERNAL, 30MM	1		
16	94520-35000	CIRCLIP, INTERNAL, 35MM	1		
17	96130-62020-10	BEARING, RADIAL BALL, 6202	1		

F-4 BLADE(NYLON/CUTTER BLADE)

D 5

Service item	F.R.T.

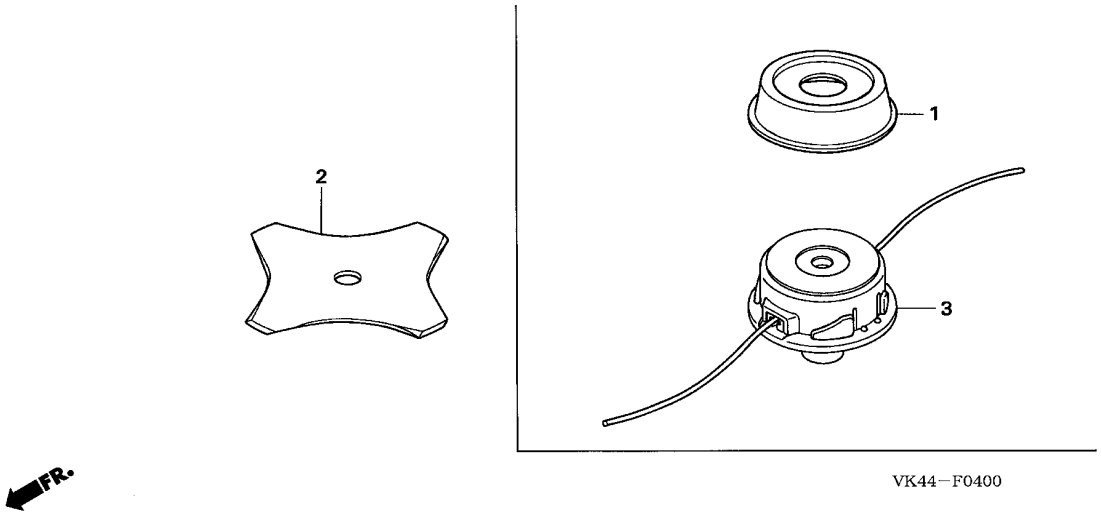

Ref. No.	Part No.	Description	Reqd. QTY UMK 435	Serial No.	Parts catalogue code
1	21913-VF9-V30	GUARD B, GRASS ----------	(1)		
2	72511-VF9-F32	BLADE, CUTTER ----------	1		
3	72560-VK4-M01	CUTTER ASSY., NYLON ---------	1		

3

F-28 LABEL

D 6

Service item	F.R.T.

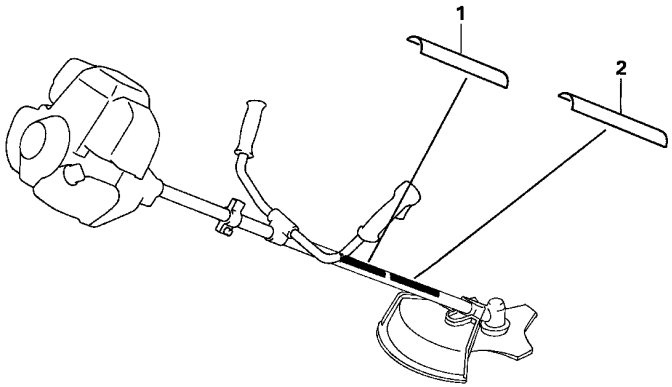

VK44−F2800

Ref. No.	Part No.	Description	Reqd. QTY UMK 435	Serial No.	Parts catalogue code
1	87150-VF9-C10	MARK, CAUTION (ENGLISH) -----	1		
	87150-VF9-E10	MARK, CAUTION (FRENCH) ------	1		
2	87521-VK4-000	MARK, EMBLEM (UMK435) -------	1		

3

F-29 TOOL

D 7

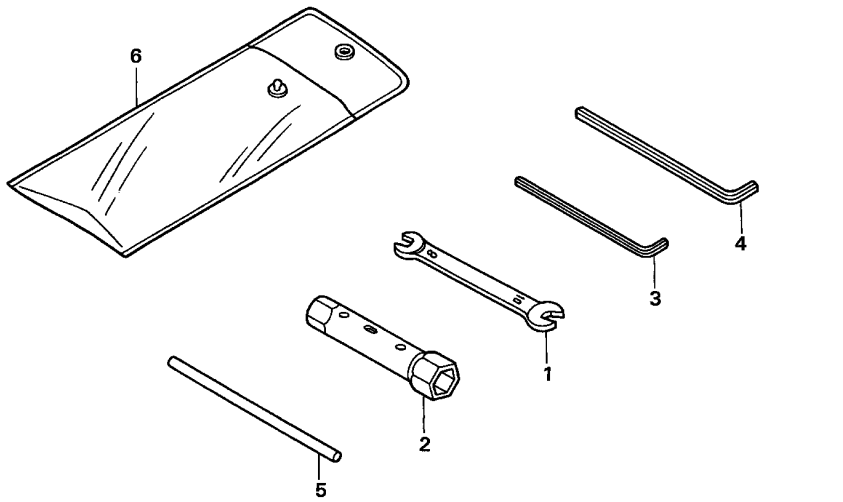

Service item	F.R.T.

Ref. No.	Part No.	Description	Reqd. QTY UMK 435	Serial No.	Parts catalogue code
1	89203-VF9-003	SPANNER, 8X10	1		
2	89216-045-010	WRENCH, SPARK PLUG	1		
3	89221-KW3-000	WRENCH, HEX., 4MM	1		
4	89221-MJ4-000	WRENCH, HEX., 5MM	1		
5	99005-01000	BAR A, HANDLE	1		
6	99008-01600	BAG, TOOL, 160MM	1		

3

F-40 SHOULDER BELT

D 8

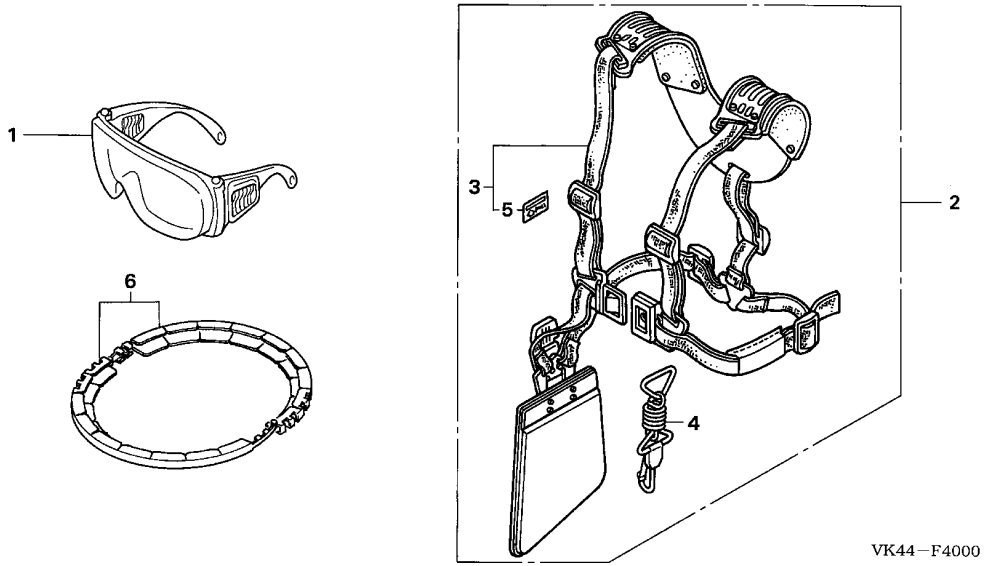

Service item	F.R.T.

Ref. No.	Part No.	Description	Reqd. QTY UMK 435	Serial No.	Parts catalogue code
1	60156-VJ3-681	SCREEN, DUST	1		
2	68150-VF9-E13	BELT ASSY., SHOULDER	1		
3	68151-VF9-E11	BELT COMP., SHOULDER	1		
4	68152-VF9-003	HOOK COMP., SHOULDER BELT	1		
5	68153-VF9-C11	MARK, QUICK RELEASE (E)	1		
	68153-VF9-E11	MARK, QUICK RELEASE (F)	1		
6	72534-VJ3-681	COVER, BLADE	1		

3

PART NO. INDEX

E 1

Part Number	Address	Page	Ref.
10000			
10100-Z0Z-405	C1	11	1
10100-Z3F-405	C1	11	1
12000			
12209-Z0H-003	C4	14	1
12209-Z3E-000	C4	14	1
12310-Z0Z-000	C1	11	2
12312-Z0Z-300	C1	11	3
12314-Z0H-300	C1	11	4
12367-Z0H-000	C1	11	5
13000			
13010-ZM5-000	C3	13	1
13101-Z0Z-000	C3	13	2
13111-ZM5-000	C3	13	3
13310-Z0Z-000	C3	13	4
14000			
14126-Z0Z-003	C4	14	2
14320-Z0Z-000	C4	14	3
14400-Z0Z-003	C4	14	4
14431-Z0H-003	C1	11	6
14441-Z0H-003	C1	11	7
14711-Z0Z-000	C4	14	5
14711-Z0Z-800	C4	14	5
14721-Z0Z-000	C4	14	6
14721-Z0Z-800	C4	14	6
14730-Z0Z-000	C1	11	8
14740-Z0Z-000	C1	11	9
14751-Z0Z-000	C4	14	7
14771-Z0H-000	C4	14	8
15000			
15422-Z0Z-000	C1	11	10
15510-Z0H-000	C1	11	11
15510-Z3E-000	C1	11	11
15600-Z3F-000	C1	11	14
15600-ZM3-003	C1	11	14
15625-Z0T-800	C1	11	15
15625-ZE1-003	C1	11	15
15721-Z0Z-000	C1	11	16
16000			
16010-ZM3-004	C7	17	1
16011-Z0H-003	C7	17	2
16011-Z0H-013	C7	17	2
16013-Z0H-003	C7	17	3
16014-ZM3-004	C7	17	4
16015-Z0H-003	C7	17	5
16015-Z0H-013	C7	17	5
16017-ZM3-004	C7	17	6
16018-ZM3-802	C7	17	7
16019-ZM3-004	C7	17	8
16020-ZM3-004	C7	17	9
16021-ZM3-004	C7	17	10
16022-ZM3-014	C7	17	11
16023-ZM3-004	C7	17	12
16024-Z0H-003	C7	17	13
16025-ZM3-004	C7	17	14
16026-ZM3-004	C7	17	15
16027-ZM3-004	C7	17	16
16028-ZM3-004	C7	17	17
16029-ZM3-004	C7	17	18
16030-ZM3-004	C7	17	19
16031-ZM3-004	C7	17	20
16032-ZM3-004	C8	18	21
16035-ZM3-802	C8	18	22
16100-Z0Z-024	C8	18	23
16100-Z0Z-034	C8	18	23
16221-Z0Z-000	C8	18	24
17000			
17211-Z0Z-000	C9	19	1
17220-Z0Z-000	C9	19	2
17231-Z0Z-000	C9	19	3
17504-ZM3-003	C11	21	1
17511-Z0Z-013	C11	21	2
17533-Z0H-000	C11	21	3
17555-Z0Z-000	C11	21	4
17620-ZM3-053	C11	21	5
17672-Z0H-003	C11	21	6
17701-Z0Z-000	C11	21	7
17702-Z0Z-000	C11	21	8
17850-VK4-M01	D1	25	1
17851-VH8-761	D1	25	2
17852-VH8-641	D1	25	3
17853-VF9-V31	D1	25	4
17854-VF9-V31	D1	25	5
17856-VF9-V31	D1	25	6
17859-VF9-V31	D1	25	7
18000			
18310-Z0Z-801	C10	20	1
18350-Z0Z-800	C10	20	2
18354-Z0Z-800	C10	20	3
18515-Z0Z-300	C10	20	4
18518-Z0Z-000	C10	20	5
18518-Z0Z-010	C10	20	5
18518-Z0Z-020	C10	20	5
19000			
19611-Z0Z-000	C6	16	1
19631-Z0Z-010	C8	18	25
19720-Z0Z-000ZA	C13	23	1
21000			
21912-VF9-J01	D2	26	12
21913-VF9-V30	D5	29	1
22000			
22000-Z0Z-003	C6	16	2
22100-VK4-M00	D4	28	1
22253-Z0Z-003	C6	16	3
22253-Z3F-000	C6	16	3
22254-Z0Z-003	C6	16	5
22254-Z3F-000	C6	16	4
22254-ZM5-003	C6	16	4
22255-Z3F-000	C6	16	5
22260-VK4-M01	D4	28	2
22261-VK4-003	D4	28	3
28000			
28400-Z0Z-003	C5	15	1
28414-Z0Z-000	C5	15	2
28421-ZM3-003	C5	15	3
28433-ZM3-003	C5	15	4
28442-ZM3-003	C5	15	5
28451-Z0H-003	C5	15	6
28459-Z0H-003	C5	15	7
28461-ZM3-003	C5	15	8
28462-ZM3-003	C5	15	9
30000			
30500-Z0Z-013	C12	22	1
30500-Z3F-003	C12	22	1
30522-Z0Z-000	C12	22	2
30522-Z3F-000	C12	22	2
31000			
31110-Z0Z-003	C12	22	3
31110-Z3F-003	C12	22	3
31914-Z0H-003	C1	11	17
31915-Z0H-003	C1	11	17
31916-Z0H-003	C1	11	17
32000			
32100-VF9-V31	D1	25	8
32195-Z0Z-J00	C12	22	4
40000			
40230-VK4-M01	D4	28	4
41000			
41100-VK4-M01	D2	26	1
41123-VF9-B01	D2	26	13
41125-VF9-B01	D2	26	14
41411-VK4-M01	D4	28	5
50000			
50374-VF9-B01	D4	28	6
53000			
53110-VK4-M00	D1	25	9
53136-VF9-A01	D1	25	10
53137-VF9-A01	D1	25	11
53138-VF9-A01	D1	25	12
53166-VF9-660	D1	25	13
60000			
60156-VJ3-681	D8	32	1
68000			
68150-VF9-E13	D8	32	2
68151-VF9-E11	D8	32	3
68152-VF9-003	D8	32	4
68153-VF9-C11	D8	32	5
68153-VF9-E11	D8	32	5
72000			
72511-VF9-F32	D5	29	2
72534-VJ3-681	D8	32	6
72560-VK4-M01	D5	29	3
72571-VF9-K01	D2	26	2
72611-VF9-J01	D2	26	15
72621-VF9-003	D2	26	16
72623-VF9-A01	D2	26	17
76000			
76240-VF9-K01	D2	26	3
76242-VF9-V30	D2	26	4
76247-VF9-E31	D2	26	5
76247-VF9-J01	D2	26	6
76259-VF9-J01	D2	26	7
87000			
87150-VF9-C10	D6	30	1
87150-VF9-E10	D6	30	1
87521-VK4-000	D6	30	2
87521-Z0Z-000	C14	24	1
87521-Z3F-000	C14	24	1
87531-Z0Z-000	C14	24	2
87594-Z0H-J20	C14	24	3
87594-Z0H-J30	C14	24	3
87601-Z0H-J50	C14	24	4
87660-Z0Z-J00	C14	24	5
89000			
89203-VF9-003	D7	31	1
89216-045-010	D7	31	2
89221-KW3-000	D7	31	3
89221-MJ4-000	D7	31	4
90000			
90001-Z0Z-003	C10	20	6
90009-Z0H-003	C1	11	18
	C6	16	6
90009-Z0Z-003	C9	19	4
90010-Z0H-003	C11	21	9
90010-Z0Z-003	C1	11	19
90011-Z0H-811	D1	25	14
90012-Z0H-005	C12	22	5
90012-ZM3-003	C5	15	10
90013-Z0H-004	C1	11	20
90013-Z0Z-003	C2	12	21
90014-Z0H-003	C8	18	26
90015-Z0H-003	C13	23	2
90017-Z0H-000	C2	12	22
90018-Z0H-003	C5	15	11
	C8	18	27
	C9	19	5
	C10	20	7
	C11	21	10
90019-Z0H-003	C2	12	23
90055-ZE1-000	C10	20	8
90101-VF9-V31	D1	25	15
90101-VJ3-681	D2	26	8
90101-VK4-003	D4	28	7
90101-VK4-M01	D1	25	16
90102-VF9-003	D2	26	18
90102-VK4-000	D4	28	8
90102-VK4-M01	D1	25	17
90103-VK4-003	D4	28	9
90105-VJ8-C01	D4	28	10
90109-VF9-J00	D2	26	9
90112-VF9-J01	D2	26	10
90136-SM4-901	C10	20	9
90206-ZM3-000	C2	12	24
90301-VF9-A01	D2	26	19
90401-VK4-003	D4	28	11
90651-MA6-720	D4	28	12
90652-VF9-A01	D2	26	20
90654-VF9-B01	D2	26	21
90655-VF9-B01	D2	26	22
91000			
91053-VF9-A01	D2	26	23
91055-VF9-B01	D2	26	24
91056-VF9-B01	D2	26	25
91212-Z0H-003	C3	13	5
91212-Z3E-000	C3	13	5
91214-Z3F-000	C3	13	6
91214-ZM3-003	C3	13	6
91301-ZM3-000	C8	18	28
91308-Z0H-003	C8	18	29
91308-Z3E-000	C8	18	29
91401-ZM3-003	C11	21	11

4

PART NO. INDEX

E 2

Part Number	Address	Page	Ref.
91501-Z0H-000	C11	21	12
91504-ZM3-003	C5	15	12
91506-ZM3-000	C5	15	13
93000			
93301-06008-0A	D3	27	26
93500-05030-0G	D1	25	18
93892-05010-07	D3	27	27
	D4	28	13
94000			
94002-05070-0S	D1	25	19
94050-05000	C9	19	6
94050-08000	C12	22	6
94101-05000	D2	26	11
94305-40102	C2	12	26
94510-15000	D4	28	14
94510-30000	D4	28	15
94520-35000	D4	28	16
95000			
95002-41200-08	C2	12	27
95002-41300-04	C2	12	28
96000			
96130-62020-10	D4	28	17
99000			
99005-01000	D7	31	5
99008-01600	D7	31	6
99101-Z0Z-0360	C8	18	30
99101-Z0Z-0370	C8	18	30
99101-ZM5-0350	C8	18	30

4

PART NAME INDEX

F 1

Part name	Address	Page	Ref.
[A]			
ARM, EX. VALVE ROCKER	C1	11	7
ARM, IN. VALVE ROCKER	C1	11	6
ARM, SWING	C5	15	7
ARRESTER COMP., SPARK	C10	20	2
[B]			
BAG, TOOL, 160MM	D7	31	6
BAND, WIRE HARNESS	D4	28	12
BAR A, HANDLE	D7	31	5
BEARING, RADIAL BALL, 6000	D2	26	24
BEARING, RADIAL BALL, 6000Z	D2	26	25
BEARING, RADIAL BALL, 6001LL	D2	26	23
BEARING, RADIAL BALL, 6202	D4	28	17
BELT ASSY., SHOULDER	D8	32	2
BELT COMP., SHOULDER	D8	32	3
BELT, TIMING	C4	14	4
BLADE, CUTTER	D5	29	2
BODY ASSY., AIR PURGE	C7	17	6
BODY ASSY., PUMP	C7	17	5
BOLT, 5X53	C8	18	26
BOLT, CLUTCH	C6	16	3
BOLT, FLANGE SOCKET, 6X20	D4	28	8
BOLT, HEX., 6X8	D3	27	26
BOLT, SOCKET, 4X14	C12	22	5
BOLT, SOCKET, 5X12	C2	12	23
BOLT, SOCKET, 5X15	D2	26	10
BOLT, SOCKET, 5X16	C5	15	11
	C8	18	27
	C9	19	5
	C10	20	7
	C11	21	10
BOLT, SOCKET, 5X20	C1	11	18
	C6	16	6
	D2	26	8
			18
	D4	28	9
BOLT, SOCKET, 5X25	C9	19	4
BOLT, SOCKET, 5X30	C11	21	9
	D2	26	9
BOLT, SOCKET, 5X32	C1	11	19
BOLT, SOCKET, 5X9	D1	25	14
BOLT, SOCKET, 6X15	D4	28	10
BOLT, SOCKET, 6X20	D4	28	7
BOLT, SOCKET, 6X25	D1	25	16
BOLT, SOCKET, 6X30	D1	25	17
BOLT, STUD 2, 5X45.5	C10	20	6
BOLT, TOP COVER	C13	23	2
[C]			
CAP ASSY., FUEL TANK	C11	21	5
CAP ASSY., OIL FILLER	C1	11	14
CAP, THROTTLE LEVER	D1	25	5
CARBURETOR ASSY.	C8	18	23
CASE COMP., AIR CLEANER	C9	19	2
CASE COMP., GEAR	D2	26	1
CASE, RECOIL STARTER	C5	15	2
CIRCLIP, EXTERNAL, 10MM	D2	26	22
CIRCLIP, EXTERNAL, 15MM	D4	28	14
CIRCLIP, EXTERNAL, 30MM	D4	28	15
CIRCLIP, INTERNAL, 26MM	D2	26	21
CIRCLIP, INTERNAL, 28MM	D2	26	20
CIRCLIP, INTERNAL, 35MM	D4	28	16
CLAMP, TUBE	C2	12	27
			28
CLIP, HIGH TENSION CORD	C12	22	2
CLIP, TUBE	C11	21	11
CLUTCH ASSY.	C6	16	2
COIL ASSY., IGNITION	C12	22	1
COLLAR	C5	15	12
COLLAR A, HEAD COVER	C5	15	13
COLLAR, TANK GUARD	C11	21	12
CORD, STOP SWITCH	C12	22	4
COVER COMP., TOP	C13	23	1
COVER, AIR CLEANER	C9	19	3
COVER, BLADE	D8	32	6
COVER, CYLINDER HEAD	C1	11	2
COVER, FAN	C6	16	1
COVER, NUT	D2	26	17
COVER, PRIMER PUMP	C7	17	15
CRANKCASE SET	C1	11	1
CRANKSHAFT COMP.	C3	13	4
CUTTER ASSY., NYLON	D5	29	3
[D]			
DEFLECTOR ASSY., GRASS	D2	26	3
DEFLECTOR, GRASS	D2	26	5
			6
DIAPHRAGM ASSY., METERING	C7	17	3
DIAPHRAGM, PUMP	C7	17	4
[E]			
ELEMENT, AIR CLEANER	C9	19	1
[F]			
FILTER, BREATHER	C1	11	5
FILTER, EXHAUST	C10	20	3
FILTER, FUEL	C11	21	6
FILTER, FUEL INLET	C8	18	22
FLYWHEEL COMP.	C12	22	3
[G]			
GASKET, METERING DIAPHRAGM	C7	17	1
GASKET, PUMP	C7	17	2
GEAR ASSY., BEVEL	D2	26	14
GRIP, L. HANDLE	D1	25	13
GRIP, L. THROTTLE LEVER	D1	25	6
GRIP, R. THROTTLE LEVER	D1	25	4
GROMMET, FUEL TUBE	C11	21	1
GROMMET, HEAD COVER	C1	11	4
GUARD B, GRASS	D5	29	1
GUARD, GRASS	D2	26	12
GUARD, TANK	C11	21	4
GUIDE COMP., UNDER AIR	C10	20	5
GUIDE, AIR	C10	20	4
GUIDE, ROPE	C5	15	4
[H]			
HARNESS ASSY., WIRE	D1	25	8
HOLDER A, BLADE	D2	26	15
HOLDER A, HANDLE	D1	25	10
HOLDER B, BLADE	D2	26	16
HOLDER B, HANDLE	D1	25	11
HOLDER C, HANDLE	D1	25	12
HOLDER, HANGER	D4	28	6
HOOK COMP., SHOULDER BELT	D8	32	4
HOUSING ASSY., CLUTCH	D4	28	2
HOUSING, CLUTCH	D4	28	3
[J]			
JET	C8	18	30
[K]			
KNOB, RECOIL STARTER	C5	15	8
[L]			
LEVER ASSY., THROTTLE	D1	25	1
LEVER, METERING	C7	17	12
LEVER, THROTTLE	D1	25	2
LEVER, THROTTLE LOCK	D1	25	3
LIFTER COMP., EX. VALVE	C1	11	9
LIFTER COMP., IN. VALVE	C1	11	8
[M]			
MARK	C14	24	5
MARK, CAUTION	D6	30	1
MARK, EMBLEM	C14	24	1
	D6	30	2
MARK, HONDA	C14	24	2
MARK, OIL CAUTION	C14	24	3
MARK, QUICK RELEASE	D8	32	5
MARK, TYPE	C14	24	4
MUFFLER COMP.	C10	20	1
[N]			
NUT, FLANGE, 5MM	C9	19	6
NUT, FLANGE, 8MM	C12	22	6
NUT, HEX., 10MM	D2	26	19
NUT, HEX., 5MM	D1	25	19
NUT, SELF-LOCK, 5MM	C10	20	9
NUT, TAPPET ADJUSTING	C2	12	24

PART NAME INDEX

F 2

Part name	Address	Page	Ref.
[O]			
OIL SEAL, 10X20X5	C3	13	5
OIL SEAL, 15X25X6	C3	13	6
O-RING	C7	17	14
O-RING, 12.3X2.4	C8	18	29
O-RING, 14.8X2.4	C8	18	28
OUTER COMP., CLUTCH	D4	28	1
[P]			
PACKING, CARBURETOR	C8	18	24
PACKING, OIL FILLER CAP	C1	11	15
PIN, METERING LEVER	C7	17	11
PIN, PISTON	C3	13	3
PIN, SPRING, 4X10	C2	12	26
PIPE ASSY., FRAME	D4	28	4
PIPE ASSY., HANDLE	D1	25	9
PISTON	C3	13	2
PLATE ASSY., OIL OUTLET VALVE	C1	11	11
PLATE, DEFLECTOR	D2	26	7
PLATE, NYLON CUTTING	D2	26	2
PLUG, SPARK	C1	11	17
PULLEY COMP., CAMSHAFT	C4	14	3
PULLEY, RECOIL STARTER	C5	15	6
PUMP, PRIMER	C8	18	21
[R]			
REEL, RECOIL STARTER	C5	15	3
RETAINER, VALVE SPRING	C4	14	8
RING SET, PISTON	C3	13	1
RING, RETAINING	C7	17	13
ROLLER, 4X31.8	C4	14	2
ROPE, RECOIL STARTER	C5	15	9
RUBBER, TANK MOUNTING	C11	21	3
[S]			
SCREEN, DUST	D8	32	1
SCREEN, INLET	C7	17	7
SCREW-WASHER, 5X10	D3	27	27
	D4	28	13
SCREW, METERING LEVER PIN	C7	17	10
SCREW, PAN, 4X8	C1	11	20
	C2	12	21
SCREW, PAN, 5X30	D1	25	18
SCREW, PUMP COVER	C7	17	18
SCREW, SETTING	C5	15	10
SCREW, TAPPET ADJUSTING	C2	12	22
SCREW, TAPPING, 4X20	D1	25	15
SCREW, TAPPING, 4X6	C10	20	8
SCREW, THROTTLE COLLAR	C7	17	17
SEAL, HEAD COVER	C1	11	3
SEAL, VALVE STEM	C4	14	1
SHAFT, DRIVE	D4	28	5
SHAFT, GEAR	D2	26	13
SHROUD	C8	18	25
SPACER, DEFLECTOR	D2	26	4
SPANNER, 8X10	D7	31	1
SPRING, METERING LEVER	C7	17	9
SPRING, PUMP	C7	17	19
SPRING, RECOIL STARTER	C5	15	5
SPRING, THROTTLE LEVER	D1	25	7
SPRING, VALVE	C4	14	7
STARTER ASSY., RECOIL	C5	15	1
SWIVEL	C7	17	16
[T]			
TANK, FUEL	C11	21	2
TUBE, BREATHER	C1	11	16
TUBE, FUEL RETURN	C11	21	8
TUBE, FUEL TANK	C11	21	7
TUBE, OIL	C1	11	10
[V]			
VALVE, EX.	C4	14	6
VALVE, INLET NEEDLE	C7	17	8
VALVE, IN.	C4	14	5
[W]			
WASHER	C7	17	20
WASHER, 5MM	D4	28	11
WASHER, CLUTCH	C6	16	4
WASHER, PLAIN, 5MM	D2	26	11
WASHER, WAVE	C6	16	5
WRENCH, HEX., 4MM	D7	31	3
WRENCH, HEX., 5MM	D7	31	4
WRENCH, SPARK PLUG	D7	31	2

1 FOREWORD INDEX

2 ENGINE GROUP

3 FRAME GROUP

4 PART NUMBER INDEX

5 PART NAME INDEX

HONDA

The Power of Dreams

E.2005.11

Published by Honda Motor Co., Ltd.
Printed in Japan

February 05,2006

HONDA POWER PRODUCTS

PARTS CATALOG NEWS

Honda Motor Co., Ltd. Service Division

PARTS CATALOG - CORRECTED

Printed in Japan

CODE NO.	14VK4502
PARTS CATALOG TITLE	UMK435
NEWS NO.	001

Block No.	Ref. No.	Note	Part No.	Description	Reqd.QTY UMK 435	Serial No.	Parts catalog code
F-4			**BLADE (NYLON/CUTTER BLADE)**				

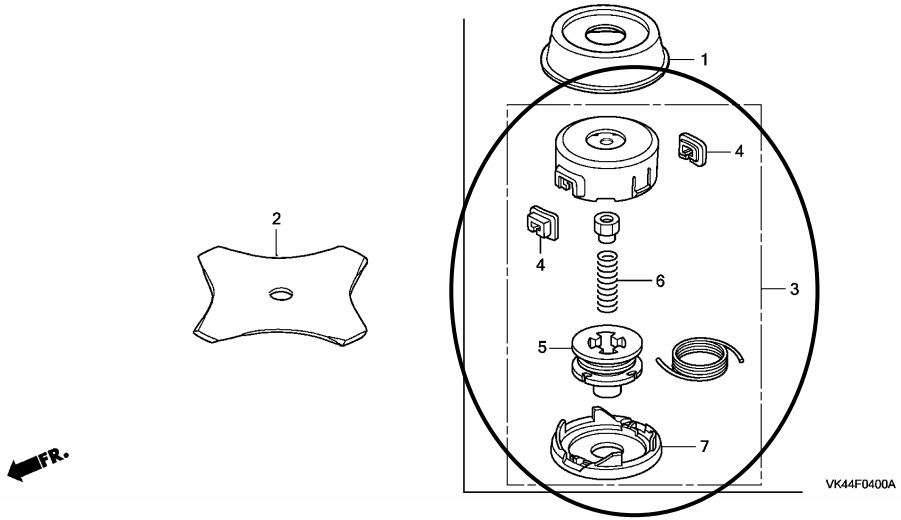

F-4	4	D	72562-VK4-M01	EYELET	2
	5	D	72563-VK4-M01	SPOOL	1

NOTE A:PART NO.CHANGE D:NEWLY PROVIDED E:PART NO.DELETION K:REQUIRED NO.CORRECTION L:APPLICATION SERIAL NO.CORRECTION
T:APPLICATION CORRECTION Z:REMARKS CHANGE

BOOKNo.:14VK4502

Block No.	Ref. No.	Note	Part No.	Description	Reqd.QTY UMK 435	Serial No.	Parts catalog code
	6	D	72564-VK4-M01	SPRING	1		
	7	D	72566-VK4-M01	COVER	1		

NOTE A:PART NO.CHANGE D:NEWLY PROVIDED E:PART NO.DELETION K:REQUIRED NO.CORRECTION L:APPLICATION SERIAL NO.CORRECTION
T:APPLICATION CORRECTION Z:REMARKS CHANGE

February 19,2006

HONDA POWER PRODUCTS

PARTS CATALOG NEWS

Honda Motor Co., Ltd. Service Division

PARTS CATALOG - CORRECTED

Printed in Japan

CODE NO.	14VK4502
PARTS CATALOG TITLE	UMK435
NEWS NO.	002

Block No.	Ref. No.	Note	Part No.	Description	Reqd.QTY UMK 435	Serial No.	Parts catalog code
E-7			**CRANKSHAFT/PISTON**				

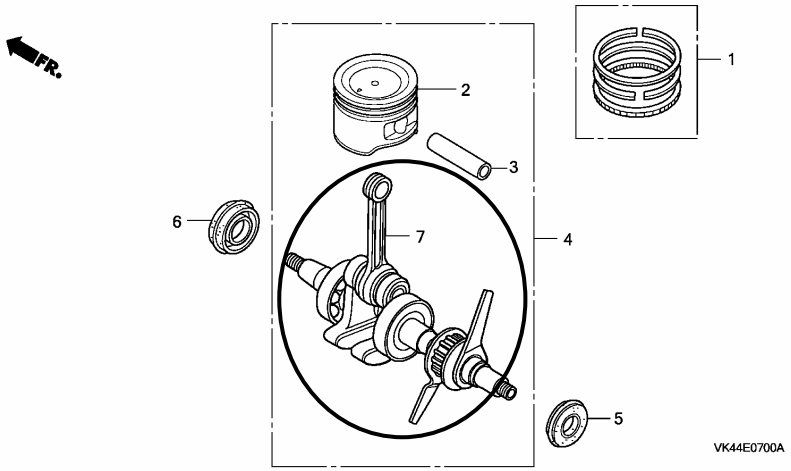

E-7	7	D	13310-Z0Z-305	CRANKSHAFT COMP.	(1)	-------	-------	UGCT

NOTE A:PART NO.CHANGE D:NEWLY PROVIDED E:PART NO.DELETION K:REQUIRED NO.CORRECTION L:APPLICATION SERIAL NO.CORRECTION
T:APPLICATION CORRECTION Z:REMARKS CHANGE

March 12,2006

HONDA POWER PRODUCTS

PARTS CATALOG NEWS

Honda Motor Co., Ltd. Service Division

PARTS CATALOG - CORRECTED

Printed in Japan

CODE NO.	14VK4502
PARTS CATALOG TITLE	UMK435
NEWS NO.	003

Block No.	Ref. No.	Note	Part No.	Description	Reqd.QTY UMK 435	Serial No.	Parts catalog code
F-2	5	E	76247-VF9-E31	*PARTS NO. DELETION			
		D	76247-VF9-J01	DEFLECTOR, GRASS	1		
	6	D	76247-VF9-E31	DEFLECTOR, GRASS	1		
		E	76247-VF9-J01	*PARTS NO. DELETION			

NOTE A:PART NO.CHANGE D:NEWLY PROVIDED E:PART NO.DELETION K:REQUIRED NO.CORRECTION L:APPLICATION SERIAL NO.CORRECTION
T:APPLICATION CORRECTION Z:REMARKS CHANGE